NASA Docking System (NDS) Interface Definitions Document (IDD)

System Architecture and Integration Office Engineering Directorate

Date: December 15, 2011
Revision F

Verify that this is the correct version before use

National Aeronautics and Space Administration
Houston, Texas 77058

NASA Docking System (NDS)
Interface Definitions Document (IDD)

Prepared By:

/s/ James L. Lewis 12/16/11
James Lewis Date
Project Manager, EA3

Approved By:

/s/ Bruce W. Sauser 12-16-11
Bruce Sauser Date
Systems Architecture and Integration Office Manager, EA3-1

/s/ Caris A. Hatfield 12/16/11
Caris (Skip) Hatfield Date
NDSP Project Manager, OA

Verify that this is the correct version before use

Change Record

Rev.	Description	Date
Basic	Initial issue	05/2010
A	Revised to add definition to the interface by removing TBDs and providing updates based on matured design. Sections 4 and 5 were swapped, including Section 6 and Section 5, in order to improve readability by discussing the docking interface prior to the host interface.	07/2010
B	Changed Export Control designation from ITAR to EAR. Made non-technical editorial changes. Updated errata, documenting comments from NDS Baseline Review.	08/2010
C	Incorporated changes approved during the NDS Baseline Review. Added definition of -301, -302, -303, and -304 configurations. Added IDs to interface definition requiring verification. Added Section 7.0 describing Host Requirements for NDS Integration. Removed Export Control EAR designation. Document can be released in the public domain.	11/2010
D	Updated based on latest Project Technical Requirements Specification and design for Critical Design Review. Refer to Appendix J for complete list of changes.	03/2011
E	Updated based on the closure of open TBDs/TBRs. Updated based on the Critical Design Review RIDs and comments closure. Refer to Appendix K for changes not covered by RIDs.	08/2011
F	Updated based on the closure of open action items (AI). Updated on the closure of open TBDs/TBRs. Updated based on design maturity. Refer to Appendix L for details.	12/2011

Verify that this is the correct version before use

Table of Contents

Section **Page**

1.0 INTRODUCTION 1-1
1.1 Purpose and Scope 1-1
1.2 Responsibility and Change Authority 1-2

2.0 APPLICABLE AND REFERENCE DOCUMENTS 2-1
2.1 Applicable Documents 2-1
2.2 Reference Documents 2-3
2.3 Order of Precedence 2-3

3.0 GENERAL SYSTEM OVERVIEW 3-1
3.1 System Description 3-1
3.2 Mass Properties 3-4
3.3 Volume Properties 3-5
3.4 Mating Plane Definition 3-6
3.5 Units of Measure, Dimensions, and Tolerances 3-6
3.6 NDS Coordinate System 3-7
3.6.1 NDS Structural Coordinate System 3-7
3.6.2 NDS Docking Coordinate Systems 3-8
3.7 NDS Component Numbering and Labeling 3-9
3.7.1 NDS Component Numbering 3-9
3.7.2 NDS Component Labeling 3-9
3.8 NDS Berthing 3-10

4.0 NDS DOCKING INTERFACE 4-1
4.1 Structural/Mechanical 4-2
4.1.1 Thermal Interface 4-4
4.1.2 Soft Capture System 4-9
4.1.3 Hard Capture System 4-17
4.1.4 NDS Interface Component Materials 4-30
4.1.5 Loads 4-31
4.1.6 Leak Rate 4-33
4.2 Electrical Interfaces 4-34
4.2.1 Electrical Bonding 4-34
4.3 Resource Transfer 4-35
4.3.1 Power Transfer and Command and Data Handling Transfer Umbilical 4-36
4.3.2 Water Transfer 4-39
4.3.3 Fuel Transfer 4-39
4.3.4 Pressurant Transfer 4-39
4.3.5 Oxidizer Transfer 4-39

5.0 NDS-TO-HOST VEHICLE INTERFACE 5-1
5.1 Interface Description 5-1
5.2 Structural/Mechanical/Seal 5-1
5.2.1 Mounting Interface 5-1
5.2.2 Thermal Interface 5-11

Verify that this is the correct version before use

5.3 NDS-to-Host Vehicle Electrical and Signal Interface 5-16
5.3.1 Umbilical Power Transfer Interface-to-Host Vehicle (excluding -302)..... 5-18
5.3.2 Umbilical Data Transfer Interface-to-the-Host Vehicle (excluding-302) 5-18
5.3.3 Umbilical Connector Data Bus Termination Wires Interface-to-the-Host Vehicle (excluding -302) 5-19
5.3.4 Pyrotechnic Interface NDS (-301, -303, and -305)..... 5-19
5.3.5 Electrical Power from Host Vehicle-to-NDS..... 5-21
5.3.6 Communications Between the Host Vehicle and the NDS 5-21
5.3.7 Heater Power and Control 5-26
5.3.8 Ground Support Equipment Software Interface-to-NDS 5-27
5.3.9 Electrical Bonding Between the Host Vehicle and the NDS 5-27
5.4 NDS-to-Host Vehicle Software Interface 5-27
5.4.1 NDS-to-Host Vehicle Application Software Interface 5-28
5.4.2 NDS Packet Structures..... 5-34
5.4.3 NDS Data Transfer 5-39
5.4.4 Command List 5-40
5.4.5 Measurement List 5-40
5.5 NDS-to-Host Vehicle Connectors Locations 5-40
5.5.1 NDS (excluding -302) Power Transfer Interface to Host Vehicle Connector Location 5-43
5.5.2 NDS (excluding -302) Data Transfer Interface to Host 5-44
5.5.3 Water Transfer..... 5-44
5.5.4 Fuel Transfer 5-44
5.5.5 Pressurant Transfer 5-44
5.5.6 Oxidizer Transfer 5-44

6.0 NDS-TO-GROUND SUPPORT EQUIPMENT INTERFACE 6-1

6.1 Structural/Mechanical 6-1
6.1.1 Lifting Interface 6-1
6.1.2 Seal Cover Interface 6-1
6.1.3 Pressure Dome Interfaces 6-1
6.1.4 Pressure Seal Interface, Pass-Through Connectors 6-1
6.1.5 Pressure Seal Interface, Test Ports 6-1
6.1.6 Handling Fixture Interface 6-3
6.1.7 Instrument Checkout 6-4
6.2 Electrical Interfaces for Command and Data Handling 6-4

7.0 HOST REQUIREMENTS FOR NASA DOCKING SYSTEM INTEGRATION 7-1

APPENDIX A ACRONYMS AND ABBREVIATIONS A-1

APPENDIX B DEFINITION OF TERMS B-1

APPENDIX C NASA DOCKING SYSTEM (NDS) COMMAND DATA DICTIONARY [R.LIDS.0004], [R.LIDS.0014] TBR-75 ..... C-1

APPENDIX D NASA DOCKING SYSTEM (NDS) HEATER MASTER MEASUREMENT LIST (MML) TBR-76 ..... D-1

APPENDIX E NASA DOCKING SYSTEM (NDS) CONFIGURATION DIFFERENCESE-1

Verify that this is the correct version before use

APPENDIX F HOST INTERFACE CONNECTOR PINOUTS [R.LIDS.5037] F-1

APPENDIX G FAILURE RESPONSE TABLES G-1

APPENDIX H CABLE MASS AND LENGTH ESTIMATING TOOL H-1

APPENDIX I ERRATA AND TO BE DETERMINED/TO BE REVIEWED LIST I-1

APPENDIX J INTERFACE DEFINITION DOCUMENT (IDD) CHANGE RECORD FOR REVISION D J-1

APPENDIX K INTERFACE DEFINITION DOCUMENT (IDD) CHANGE RECORD FOR REVISION E K-1

APPENDIX L INTERFACE DEFINITION DOCUMENT (IDD) CHANGE RECORD FOR REVISION F L-1

List of Tables

Section **Page**

Table 3-1: Mass Properties 3-5
Table 3-2: Linear Tolerances 3-7
Table 3-3: Angular Tolerances 3-7
Table 4-1: NDS Initial Contact Conditions “Design To” Limits [R.LIDS.0063] 4-17
Table 4-2: NDS I/F Component Materials 4-30
Table 4-3: SCS Maximum Docking Loads in Passive Mode 4-31
Table 4-4: SCS Maximum Component Loads in Passive Mode 4-31
Table 4-5: SCS Docking Loads for Active NDS 4-32
Table 4-6: HCS Maximum Mated Loads 4-32
Table 4-7: HCS Mated Load Sets 4-33
Table 4-8: FRAM-Type Connector Pinouts [R.LIDS.5022] 4-38
Table 5-1: (-302 and -305) Box Mass Properties 5-11
Table 5-2: NDS Remote-Mounted Electrical Boxes Power Dissipation (-302 and -305) 5-16
Table 5-3: NDS Implementation of MIL-STD-1553B Mode Codes 5-24
Table 5-4: NDS and Heater MIL-STD-1553 Subaddresses 5-25
Table 5-5: UML Communication Diagram Elements 5-28
Table 5-6: Host Vehicle-to-NDS Command Packet 5-35
Table 5-7: Host Vehicle-to-NDS Command Packet Parameters 5-35
Table 5-8: NDS-to-Host Vehicle H&S Packet 5-36
Table 5-9: NDS-to-Host Vehicle H&S Packet Parameters 5-36
Table 5-10: NDS-to-Host Vehicle H&S Packet Types 5-37
Table 5-11: NDS-to-Host Vehicle H&S Command Response Types 5-38
Table 5-12: Transfer Frame Packet Structure 5-38
Table 5-13: Transfer Frame Parameter Definitions 5-38
Table 5-14: CRC-CCITT Parameters 5-39
Table 5-15: NDS-to-Host Vehicle C&DH Interface Layers 5-39

Verify that this is the correct version before use

Table 5-16: NDS-to-Host Vehicle C&DH Interface Layers 5-40
Table 5-17: NDS (excluding -302 and -305) Tunnel Connections-to-Host Vehicle Locations 5-42
Table 7-1: Host Requirements 7-1

List of Figures

Figure 1-1: IDD Structure 1-2
Figure 3-1: NDS System Functional Interface Diagram 3-3
Figure 3-2: NDS (-301 and -303) 3-4
Figure 3-3: NDS Structural Coordinate System 3-8
Figure 3-4: NDS Active and Passive Docking Coordinate Systems 3-8
Figure 4-1: NDS Docking Interface Diagram 4-1
Figure 4-2: NDS Docking Interface 4-2
Figure 4-3: NDS Cross Section [R.LIDS.5003] 4-4
Figure 4-4: NDS Mating Interface Allowable Thermal Differential for Hard and Soft Capture [R.LIDS.5007] 4-6
Figure 4-5: NDS Post Hard Mate Warm Up Profile 4-8
Figure 4-6: NDS Post Hard Mate Cool Down Profile 4-9
Figure 4-7: NDS Capture Ring in Passive Mode [R.LIDS.5008] 4-10
Figure 4-8: NDS Capture Ring in Active Mode [R.LIDS.5009] 4-10
Figure 4-9: SCS Guide Petal System [R.LIDS.5010] 4-11
Figure 4-10: SCS Guide Petal System Detail [R.LIDS.5011] 4-12
Figure 4-11: SCS Feature Definition [R.LIDS.5012] 4-14
Figure 4-12: Guide Petal Removal – IVA Interface 4-15
Figure 4-13: SCS Magnetic Capture System [R.LIDS.5013] 4-16
Figure 4-14: HCS Docking Interface [R.LIDS.0029] 4-19
Figure 4-15: NDS (excluding -302) HCS Mating Plane Seal and Electrical Bonding Details [R.LIDS.1006] 4-20
Figure 4-16: NDS (-302) HCS Mating Plane Seal and Electrical Bonding Details [R.LIDS.1007] 4-21
Figure 4-17: HCS Guide Pin Detail [R.LIDS.1005] 4-22
Figure 4-18: HCS Guide Pin Hole Detail [R.LIDS.1005.1] 4-23
Figure 4-19: HCS Hook Configurations [R.LIDS.0029] 4-24
Figure 4-20: HCS Active Hook Detail [R.LIDS.1124] 4-25
Figure 4-21: HCS Passive Hook Detail (Excluding -304) [R.LIDS.1125] 4-26
Figure 4-22: HCS Active Hook Motion Envelope 4-27
Figure 4-23: Load Response of Active Hook Mechanism 4-27
Figure 4-24: Load Response of Passive Hook Mechanism (Including Spring Washer Stack) Hard Capture Sensors and Strikers 4-28
Figure 4-25: Single Separator Force Separation Curve 4-30
Figure 4-26: NDS Electrical Bonding 4-35
Figure 4-27: NDS Resource Transfer 4-36
Figure 5-1: NDS-to-Host Vehicle Interface Diagram 5-1
Figure 5-2: NDS (-302 and -305) Host-Provided MMOD Interface [R.LIDS.1111] 5-3

Verify that this is the correct version before use

Figure 5-3: NDS-to-Host Vehicle Mounting Interface [R.LIDS.0001] 5-8
Figure 5-4: NDS (-302 and -305) Remote Electrical Boxes 5-10
Figure 5-5: NDS Post Hard Mate Warm Up Profile 5-14
Figure 5-6: NDS Post Hard Mate Cool Down Profile 5-15
Figure 5-7: NDS-to-Host Vehicle Electrical Interface 5-18
Figure 5-8: Maximum Pyroshock Levels at NDS/NDS and NDS/Host I/F for Contingency Pyrotechnic NDS Separation 5-20
Figure 5-9: Block Diagram TIA-422-B Serial Communications Host Vehicle-to-NDS 5-21
Figure 5-10: Block Diagram MIL-STD-1553B Serial Communications Host Vehicle-to-NDS 5-22
Figure 5-11: Safe Operation Area for TIA-422-B C&DH Serial Port [R.LIDS.5033] 5-23
Figure 5-12: Host Vehicle-to-NDS Command Handling Interface 5-29
Figure 5-13: Host Vehicle-to-NDS H&S Data Handling Interface 5-31
Figure 5-14: Host Vehicle-to-NDS FDIR Handling Interface 5-33
Figure 5-15: NDS (excluding -302 and -305)-to-Host Vehicle Electrical Interface 5-41
Figure 5-16: NDS (excluding -302 and -305) Box Connections-to-Host Vehicle Electrical Interface [R.LIDS.5038] 5-41
Figure 5-17: NDS (excluding -302 and -305) Tunnel Connections-to-Host Vehicle Electrical Interface [R.LIDS.5036] 5-42
Figure 5-18: NDS (-302 and -305)-to-Host Vehicle Electrical Interfaces 5-43
Figure 6-1: Leak Test Port Locations (excluding -302) 6-2
Figure 6-2: Leak Test Port Cross Section 6-2
Figure 6-3: Leak Test Port Detail 6-3
Figure 6-4: Handling Fixture Interface to NDS Bolt Pattern 6-3

Verify that this is the correct version before use

1.0 INTRODUCTION

The NASA Docking System (NDS) mating system supports low approach velocity docking and provides a modular and reconfigurable standard interface, supporting crewed and autonomous vehicles during mating and assembly operations.

The NDS is NASA's implementation for the International Docking System Standard (IDSS) using low impact docking technology. All NDS configurations can mate with the configuration specified in the IDSS Interface Definition Document (IDD), Revision A, released May 13, 2011. The NDS evolved from the Low Impact Docking System (LIDS). The term (and its associated acronym), "international Low Impact Docking System (iLIDS)" is also used to describe this system. "NDS" and "iLIDS" may be used interchangeability. Some of the heritage documentation and implementations (e.g., software command names) used on the NDS will continue to use the "LIDS" acronym.

1.1 Purpose and Scope

This NDS IDD defines the interface characteristics and performance capability of the NDS, including uses ranging from crewed to autonomous space vehicles and from Low Earth Orbit (LEO) to deep space exploration. However, due to limitations on some electrical components, the initial certification will be only for LEO.

The responsibility for developing space vehicles and for making them technically and operationally compatible with the NDS rests with the vehicle providers. Host vehicle examples include crewed/uncrewed spacecraft, space station modules, elements, etc. Within this document, any docking space vehicle will be referred to as the "host vehicle." This document defines the NDS-to-NDS interfaces, as well as the NDS-to-host vehicle interfaces and performance capability.

This IDD is an applicable document to future Interface Requirement Documents (IRDs). It is also an applicable document for JSC-63686, Project Technical Requirements Specification for the International Low Impact Docking System, as a directed interface from the NASA Docking System Project (NDSP). In order to identify interfaces that must be verified by the NDSP, requirement identification numbers of the format, [R.LIDS.0000], have been added to this document. Further, requirements for the host vehicles are identified with identification numbers [R.LIDS.6000] and higher. It is up to implementers to examine the Project Technical Requirements Specification (PTRS) and the IDD to determine if there are any issues regarding the implementation of the NDS on their vehicle. Refer to Figure 1-1: IDD Structure.

Other docking-relevant requirements outside of the docking system interfaces, such as navigation systems and propulsion, will be covered in other documentation/agreements between the host vehicles. Specific NDS-to-vehicle Interface Control Documents (ICDs) and specifications will be addressed on a case-by-case basis.

This document contains requirements for five NDS configurations: SEZ29101800-301, SEZ29101800-302, SEZ29101800-303, SEZ29101800-304, and SEZ29101800-305. This document will use the term "NDS" when the interface description describes all configurations. Specific differences will be addressed by referring to the dash

Verify that this is the correct version before use

number(s) where the description is applicable. For example, the text will contain statements such as “(-301 and -303 only)” or “(excluding -302)” to identify that the interface description only applies to certain configurations.

At this time, only -301 and -305 are under development. Hence, -302, -303, and -304 information is for reference only.

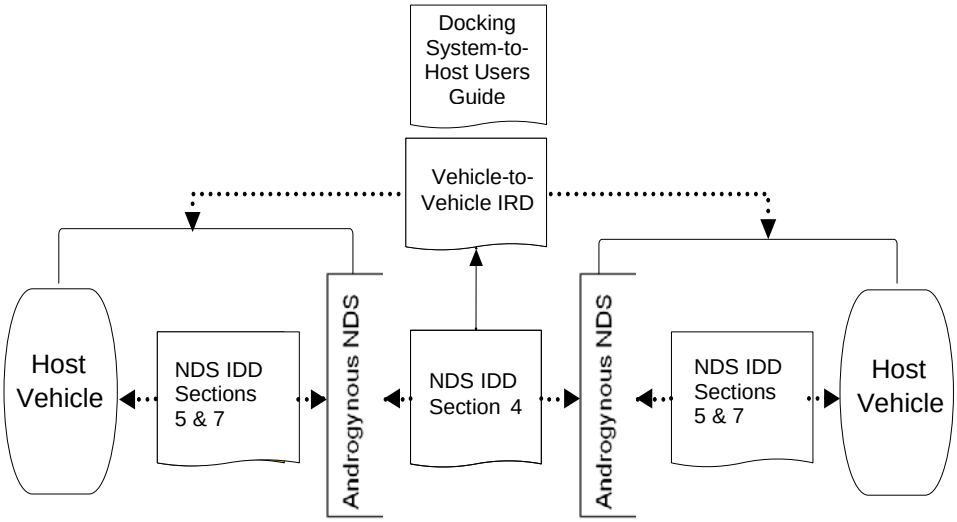

Figure 1-1: IDD Structure

1.2 Responsibility and Change Authority

The responsibility for this document, including change authority, rests with the NDSP Office.

Verify that this is the correct version before use

2.0 APPLICABLE AND REFERENCE DOCUMENTS

2.1 Applicable Documents

The following documents, of the exact date and revision shown, form a part of this document to the extent specified herein.

Document Number	Revision/ Release Date	Document Title
AMS 4078	Latest	7075-T7351 Aluminum Alloy Plate 5.62n Specification
AMS 4144	Latest	2219 Aluminum Alloy Specification
AMS 4965	Latest	Titanium Alloy Specification
AMS 5659	Latest	15%CR 5%Ni Precipitation Hardening Stainless Steel Consumable Electrode Melted Specification
AMS 6930	Latest	Titanium Alloy Bars, Forgings and Forging Stock
AMS-QQ-A-250/12	Latest	7075-T7351 Aluminum Alloy Plate Specification
ANSI/TIA/EIA 568B.2	Rev. B April 2001	Balanced Twisted-Pair Telecommunications Cabling and Components Standards
D684-14211-01	Draft available June 2011	iLIDS FRAM Connector Test Evaluation
DRPSDZ29101974-5003	Draft pending	Drill Template, NDS – Host Interface
IDSS IDD	Rev. A May 13, 2011	International Docking System Standard (IDSS) Interface Definition Document (IDD)
JSC-62809	Rev. D April 22, 2010	Human Rated Spacecraft Pyrotechnic Specification
JSC-64599	Draft March 2011	iLIDS Electric Power Quality Description Document
JSC-65842	Draft November 22, 2011	iLIDS Electromagnetic Environmental Effects (E3) Requirements Document
JSC-65970	Rev. B December 9, 2011	iLIDS Thermal and Induced Environments Specification
MA2-00-057	Draft September 28, 2000	Mechanical Systems Safety
MIL-A-8625	Rev. F September 10, 1993	Anodic Coatings for Aluminum and Aluminum Alloys
MIL-DTL-5541	Rev. F July 11, 2006	Chemical Conversion Coatings on Aluminum and Aluminum Alloys

Verify that this is the correct version before use

Document Number	Revision/ Release Date	Document Title
MIL-STD-1553B	Rev. B, Notice 2 September 2, 1986	Digital Time Division Command/Response Multiplex Data Bus
NASA-STD-4003	Rev. Basic September 8, 2003	Electrical Bonding for NASA Launch Vehicles, Spacecraft, Payloads, and Flight Equipment
NASA-STD-5017	Baseline June 13, 2006	Design and Development Requirements for Mechanisms
PRC-2001	Rev. G August 10, 2009	Heat Treatment of Steel Alloys
PRC-5002	Rev. E Sept 2006	Process Specification for Passivation and Pickling of Metallic Materials
PRC-5006	Rev. C May 2003	Process Specification for the Anodizing of Aluminum Alloy
SEZ29102058	Rev. 1 October 12, 2011	Motor Box Assembly, iLIDS
SEZ29102059	Rev. 1 October 12, 2011	Power Box Assembly, 120V iLIDS
SEZ29102060	Rev. 1 October 12, 2011	Control Box Assembly, iLIDS
SKZ29101796	Draft pending	NDS Guide Petal Removal/Installation Procedure
SKZ29101797	Draft pending	NDS-to-Host Installation Procedure
SLZ29101641	Rev. 4 September 9, 2011	Magnet with Dual Windings and Striker Plate Specification Control Drawing
SLZ29101649	Rev. 4 September 9, 2011	Umbilical EMA Specification Control Drawing
SSP 30559	Rev. D July 27, 2007	Structural Design and Verification Requirements
TIA-422-B	Rev. B May 1994	Electrical Characteristics of Balanced Voltage Digital Interface Circuits

Verify that this is the correct version before use

2.2 Reference Documents

The following documents are reference documents used in the development of this document. These documents do not form a part of this document, and are not controlled by their reference herein.

Document Number	Revision/ Release Date	Document Title
ARP 5412	Rev. A February 2005	Aircraft Lightning Environment and Related Test Waveforms
JSC-26938	Rev. D June 2009	Procurement Specification for the Androgynous Peripheral Docking System for the ISS Missions
JSC-63686	Rev. G Jan 2012	International Low Impact Docking System (iLIDS) Project Technical Requirements Specification
JSC-63688	Phase II Draft November 17, 2011	Risk Assessment Executive Summary Report (RAESR) for the International Low Impact Docking System (iLIDS)
JSC-63844	Draft May 2011	NDS Capture Performance Data Book
JSC-64096	Rev. C January 2011	Software Requirements Specification for the International Low Impact Docking System (iLIDS) Control System Software
JSC-64598	Baseline March 21, 2011	iLIDS Ionizing Radiation Control Plan
JSC-65978	Baseline September 2011	iLIDS Thermal Data Book
SDZ29101861	Rev 7 August 28, 2011	Guide Petal Drawing – SCS, iLIDS
SSP 30309	Rev. F November 2005	Safety Analysis and Risk Assessment Requirements Document
SSP 50021	Baseline, DCN 004 July 8, 2009	Safety Requirements Document
SSP 50038	Rev. B November 17, 1995	Computer-Based Control System Safety Requirements

2.3 Order of Precedence

This document provides a set of interface definitions to support integrating the NDS with existing and future space vehicles. In the event of a conflict between the text of this document and any other document, this NDS IDD takes precedence over other documents.

3.0 GENERAL SYSTEM OVERVIEW

The following subsections describe the system interfaces for the NDS. Interface responsibilities are defined with respect to the interface boundaries presented in Figure 3-1: NDS System Functional Interface Diagram.

3.1 System Description

The NDS is a peripheral docking system. The NDS (-301, -303, and -305) configurations are fully androgynous, meaning they are capable of mating to an identical configuration. In addition, the fully androgynous NDS configurations can mate to all other NDS configurations. The exceptions are: NDS (-302) cannot mate to its identical configuration and NDS (-304) cannot operate as a configuration in passive mode.

The NDS facilitates low approach velocity docking via a reconfigurable, active, closed-loop, and force-feedback-controlled mating system using modern technologies. The NDS supports both crewed and autonomous vehicles during mating and assembly operations. In addition, it is modular and reconfigurable for a variety of missions.

The NDS establishes the initial capture of two vehicles through the Soft Capture System (SCS). The SCS uses the low impact docking technology. This system consists of guide petals, magnets, magnetic striker plates (excluding -304), scarring for SCS mechanical latch striker interfaces, Electro-Mechanical Actuators (EMAs) in a Stewart platform configuration, and load sensing rings. During docking soft capture, the guide petals are the first element to make contact, transferring contact/load inputs into the load-sensing load cells. The load cells provide information to drive the EMAs to correct lateral and angular misalignment between the two opposing interfaces. Soft capture is complete when electromagnetic attachment of the magnets to the striker plates on the opposing capture ring occurs. The SCS then aligns the two mating vehicles and retracts to bring the two hard capture interfaces into hard capture range.

The Hard Capture System (HCS) uses powered hooks to engage with the passive system, providing a structural connection ready for pressurization between the mated vehicles that allows for cargo and crew transfer. The HCS consists of a tunnel, 12 active/passive hook pairs (except -304 only has 12 active hooks), seals, fine alignment guide pins, mechanized separation springs, and mechanized umbilicals.

Docking is complete when mechanized resource transfer umbilicals are extended and engaged with the spring-loaded separation system energized for undocking.

The NDS is a docking system that can be commanded via an NDS electronics interface from the host in either an active mode or passive mode. Active mode is when the NDS controls the soft capture function and all sequences of docking. Passive mode is when the NDS yields control and allows the NDS on the other vehicle, in active mode, to mate to it. Figure 3-2: NDS (-301 and -303) depicts the Androgynous NDS.

In support of the NDSP, five NDS configurations are used: the -301, -302, -303, -304, and -305.

Verify that this is the correct version before use

The -301 is a standalone assembly with all required hardware [e.g., Micro Meteoroid Orbital Debris (MMOD) shielding, electrical boxes, etc.] contained in the assembly. The -301 can dock to another -301 or any other configuration of the NDS.

The -302 has most of the same functionality as the -301. The main difference is the electrical boxes are integrated in the host vehicle rather than in the docking system assembly. Hence, the tunnel structure is shorter (i.e., compact). In addition, the -302 relies on the host vehicle for MMOD shielding. Further, the -302 does not contain a seal on the mating surface, which would support longer duration missions such as for docking systems installed on the International Space Station (ISS). Therefore, the NDS -302 cannot dock to another -302, but it can dock to all other NDS configurations that have a seal at the interface (-301, 303, and -304). However, the -302 will not be initially certified to perform powered soft capture. As a result, the -302 will only initially be certified for passive mode operations.

The -301 and -302 will be the units certified by the NDSP. The -303 and -304 will be available upon request.

The -303 is identical to the -301 with the exception that it operates on 28 Vdc instead of 120 Vdc.

The -304 is identical to the -301 with the exception that magnets, passive hooks, and pyrotechnics have been removed to reduce mass.

The -305 has the same functionality as the -301. The main difference is that the electrical boxes are integrated in the host vehicle rather than in the docking system assembly. Hence, the tunnel structure is shorter (i.e., compact). In addition, the -305 relies on the host vehicle for MMOD shielding. For a complete list of configuration differences between the dash numbers, refer to Appendix E.

Verify that this is the correct version before use

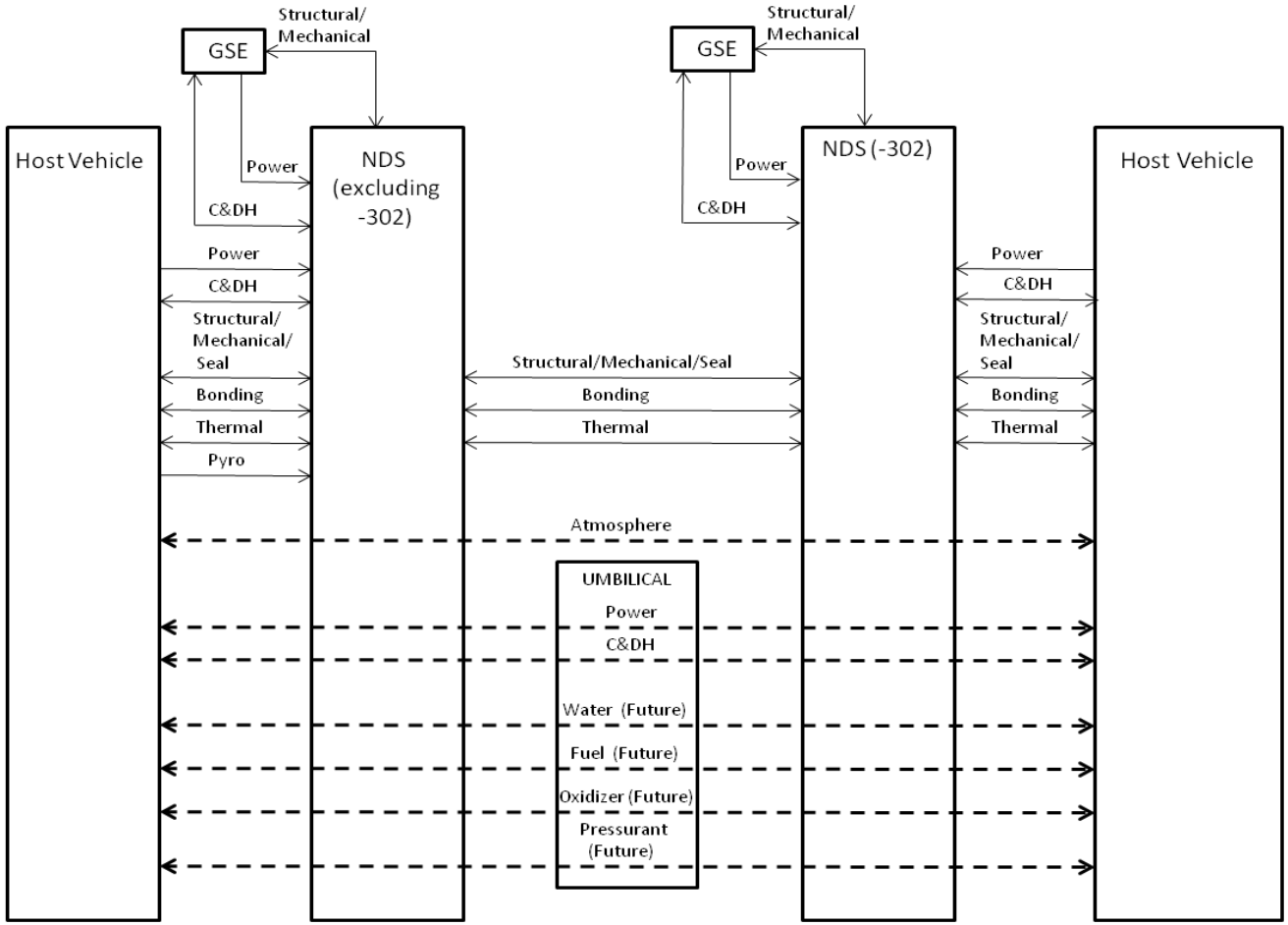

_____ Solid lines = functional interfaces

_ _ _ _ _ _ Dashed lines = pass-through resources vehicle-to-vehicle

Note: Pyro is not available on -302 or -304.

Figure 3-1: NDS System Functional Interface Diagram

Verify that this is the correct version before use

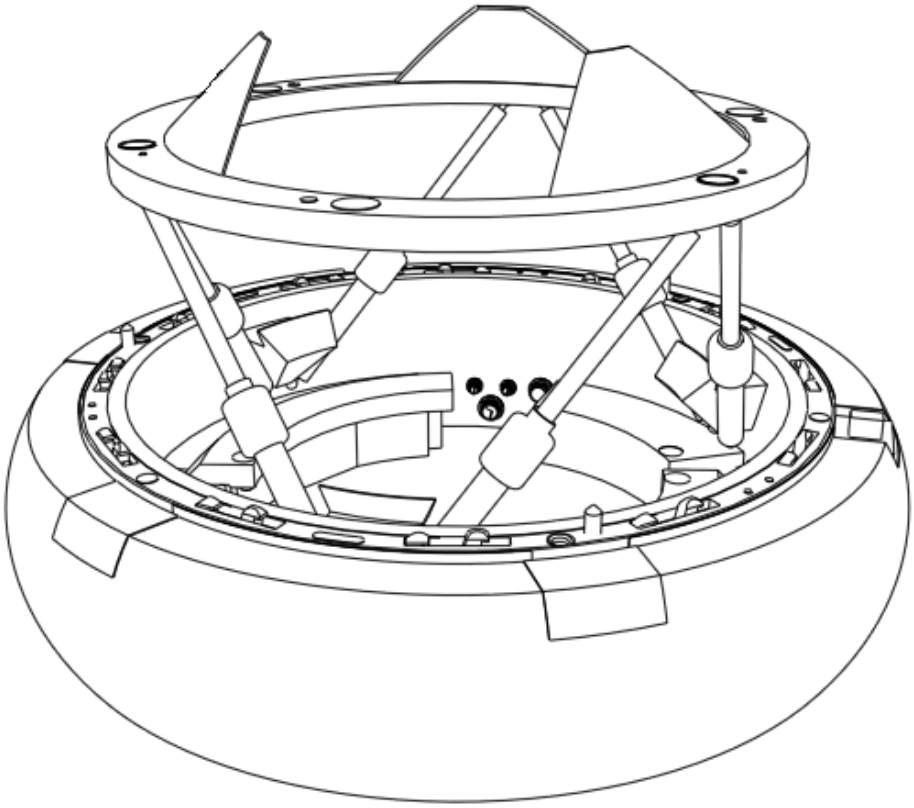

Note: Refer to Appendix E for a complete list of configuration differences.

Figure 3-2: NDS (-301 and -303)

3.2 Mass Properties

The mass properties described in Table 3-1: Mass Properties reference the NDS center of gravity relative to the coordinate system defined in Figure 4-2: NDS Docking Interface and Figure 4-3: NDS Cross Section.

Table 3-1: Mass Properties

	NDS (-301 and -303)	NDS (-302)	NDS (-302 excluding boxes)	NDS (-304)	NDS (-305)
Mass (Not to Exceed) lb (kg)	750 lb [R.LIDS.0080] (341 kg)	704 lb[(1)] (320 kg) [R.LIDS. 1056]	593 lb (270 kg)	711 lb (323 kg)	TBD-68
Inertia[(2)] xx lb-in^2 (kg-mm^2)	1.706E+06 lb-in^2 (4.992E+08 kg-mm^2)	TBD-67	1.538E+06 lb-in^2 (4.5E+08 kg-mm^2)	1.617E+06 lb-in^2 (4.732E+08 kg-mm^2)	TBD-68
Inertia[(2)] yy lb-in^2 (kg-mm^2)	1.722E+06 lb-in^2 (5.039E+08 kg-mm^2)	TBD-67	1.722E+06 lb-in^2 (5.039E+08 kg-mm^2)	1.633E+06 lb-in^2 (4.778E+08 kg-mm^2)	TBD-68
Inertia[(2)] zz lb-in^2 (kg-mm^2)	2.28E+06 lb-in^2 (6.67E+08 kg-mm^2)	TBD-67	1.98E+06 lb-in^2 (5.794E+08 kg-mm^2)	2.162E +06 lb-in^2 (6.326E +08 kg-mm^2)	TBD-68
Inertia[(2)] xy lb-in^2 (kg-mm^2)	7.006E +02 lb-in^2 (2.05E +05 kg-mm^2)	TBD-67	TBD-67	6.642E +02 lb-in^2 (1.944E +05 kg-mm^2)	TBD-68
Inertia[(2)] xz lb-in^2 (kg-mm^2)	-1.095E +02 lb-in^2 (-3.206E +04 kg-mm^2)	TBD-67	TBD-67	-1.038E +02 lb-in^2 (-3.039E +04 kg-mm^2)	TBD-68
Inertia[(2)] yz lb-in^2 (kg-mm^2)	-1.928E +02 lb-in^2 (-5.643E +04 kg-mm^2)	TBD-67	TBD-67	-1.828E +02 lb-in^2 (-5.35E +04 kg-mm^2)	TBD-68
Center of Gravity X, Y, Z in. (mm)	X = -0.014 in. (-0.356 mm) Y = 0.178 in. (4.5 mm) Z = -6.505 in. (-165.0 mm)	TBD-67	X = -0.019 in. (-0.48 mm) Y = 0.245 in. (6.223 mm) Z = -4.558 in. (-116.0 mm)	X = -0.014 in. (-0.356 mm) Y = 0.178 in. (4.5 mm) Z = -6.505 in. (-165.0 mm)	TBD-68

Notes:

1. The -302 and -305 mass listed does not include host-supplied components [e.g., MMOD shield, Thermal Protection System (TPS), etc.]. This document will define excluded integration components. The mass of these host-provided integration components is dependent on the host's implementation. The -302 and -305 mass listed does include cabling and electrical box mass for the NDS-provided, host-mounted boxes.
2. Moments of inertia are based on the nominal center of gravity location.
3. The mass details for -303 and -304 are for reference only.

3.3 Volume Properties

For host Environmental Control and Life Support System (ECLSS) analysis, the following worst-case volumes may be used. The NDS (excluding -302) internal vestibule volume is not to exceed 16.64 ft^3 (.47 m^3). The NDS (-302 and -305) internal vestibule volume is not to exceed 9.90 ft^3 (.28 m^3). This volume is defined from the NDS mounting plane to the NDS HCS mating plane. The calculated volume assumes no

hardware inside the pressure wall of the NDS tunnel. Therefore, the actual volume will be slightly less.

3.4 Mating Plane Definition

The HCS mating plane is defined as the seal plane between HCS tunnels when structurally mated. See Figure 4-7: NDS Capture Ring in Passive Mode and Figure 4-8: NDS Capture Ring in Active Mode [R.LIDS.5009] for illustrations of the mating planes.

The SCS mating plane is the plane normal to the soft capture ring axis that intersects the conic outline of the guide petals at a diameter of 41.14 in. (1045 mm). Additional details follow for SCS-specific modes:

a. Passive Mode: When the SCS capture ring is stowed, and the docking system is in the passive mode, the magnetic strikers are coplanar with the SCS mating plane see. See Figure 4-7.

b. Active Mode: When the SCS capture ring is extended, and the docking system is in the active mode, the magnets are coplanar with the SCS mating plane and the strikers are to be at least 0.059 in. (1.5 mm) below this plane. See Figure 4-8.

3.5 Units of Measure, Dimensions, and Tolerances

Unless otherwise noted herein, all dimensions in this document are shown in the English system of inch-pound units followed by the System International (SI) equivalents in parentheses or square brackets. All dimensions shown in this document assume ambient conditions [i.e., 70 °F (21 °C) and 14.7 psi (1013.5 hPa)]. Linear tolerances on metric dimensions are derived from English measurements and tolerances. Implied tolerances on linear dimensions are defined in Table 3-2: Linear Tolerances. Angular tolerances are shown in Table 3-3: Angular Tolerances. Dimensions enclosed within parentheses are for reference only and provide no tolerance. Orthographic projections are constructed using the third angle projection system.

Table 3-2: Linear Tolerances

English Dimensions	Implied Tolerances	
	(in)	(mm)
x.x	± .1	± 2.5
x.xx	± .02	± .5
x.xxx	± .005	± .13

Table 3-3: Angular Tolerances

Dimensions	Tolerances
Angular dimension (degrees)	± .5 degrees

3.6 NDS Coordinate System

NDS defines two sets of coordinate systems—the Structural coordinate system set and the Docking coordinate system set. The Docking coordinate system set is for docking operations and includes two different subsets—one for the active unit and the other for the passive unit. All of the coordinate frames described in this section are standard, right-handed coordinate frames with orthogonal axes at the origin.

3.6.1 NDS Structural Coordinate System

The NDS structural coordinate system shown in Figure 3-3: NDS Structural Coordinate System is used for internal NDS design, reference for mechanism geometry, mechanical configuration, and mass properties information.

Origin: The origin of the NDS Structural Coordinate System is defined as the intersection of the NDS cylindrical axis and the HCS mating plane (see Figure 4-2).

Z-Axis: The Z-axis coincides with the NDS cylindrical axis and is positive in the direction pointing away from the vehicle mounting plane.

Y-Axis: The Y-axis lies in the HCS mating plane and is positive from the origin toward the HCS Guide Pin-Receptacle combination. The Y-axis coincides with the NDS line of androgyny.

X-axis: The X-axis lies in the HCS mating plane and is positive from the origin toward the NDS Guide Petal 1. The X-axis coincides with the NDS line of symmetry.

Verify that this is the correct version before use

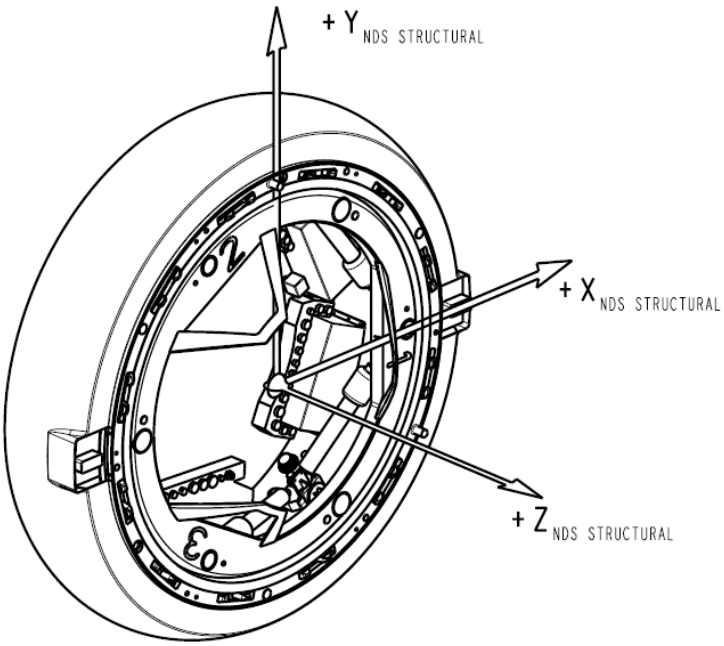

Figure 3-3: NDS Structural Coordinate System

3.6.2 NDS Docking Coordinate Systems

The NDS Docking coordinate system set is used for docking operations and analysis. It uses the same coordinate center or origin as does the NDS Structural Coordinate System. Its orientation follows an approach common in flight dynamics, where the X-axis is positive in the forward flight direction. The NDS Docking coordinate system set contains the NDS Active Docking coordinate system and the NDS Passive Docking coordinate system. The origins of the Active and Passive coordinate systems coincide once the docking units are fully mated.

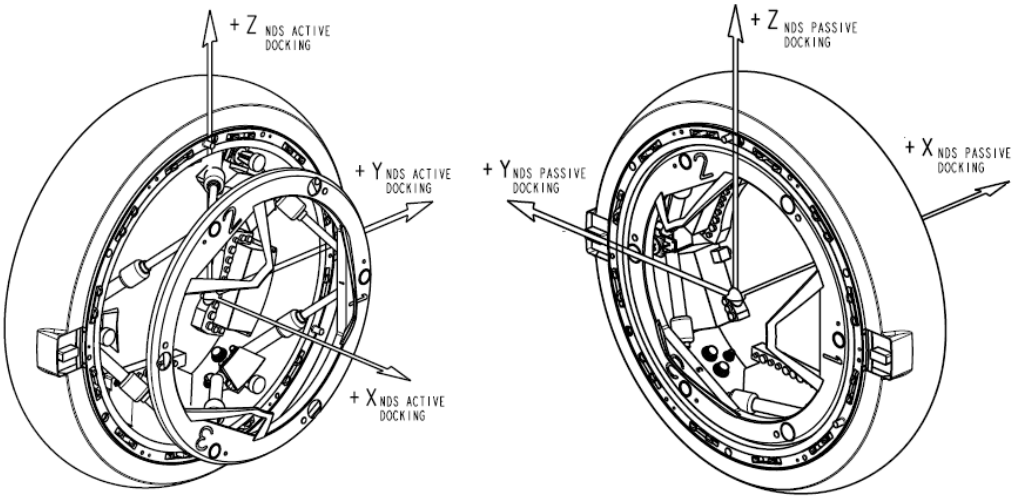

Figure 3-4: NDS Active and Passive Docking Coordinate Systems

Verify that this is the correct version before use

3.6.2.1 NDS Active Docking Coordinate System

The NDS active docking coordinate system shown in Figure 3-4: NDS Active and Passive Docking Coordinate Systems is used for docking performance analysis and is associated with the NDS unit in the active mode.

Origin: The origin of the NDS Active Docking Coordinate System is defined as the intersection of the NDS cylindrical axis and the HCS mating plane (see Figure 4-2), coincident with the NDS Docking Coordinate System origin.

X-axis: The X-axis coincides with the NDS cylindrical axis and is positive in the direction pointing away from the vehicle mounting plane.

Z-axis: The Z-axis lies in the HCS mating plane and is positive from the origin toward the HCS guide pin-receptacle combo. The Z-axis coincides with the NDS line of androgyny.

Y-axis: The Y-axis lies in the HCS mating plane and is positive from the origin toward the NDS guide petal 1. The Y-axis coincides with the NDS line of symmetry.

3.6.2.2 NDS Passive Docking Coordinate System

The NDS passive docking coordinate system shown in Figure 3-4 is used for docking performance analysis and is associated with the NDS unit in the passive mode.

Origin: The origin of the NDS Passive Docking Coordinate System is defined as the intersection of the NDS cylindrical axis and the HCS mating plane (see Figure 4-2), coincident with the NDS Docking Coordinate System origin.

X-axis: The X-axis coincides with the NDS cylindrical axis and is positive in the direction pointing toward the vehicle mounting plane.

Z-axis: The Z-axis lies in the HCS mating plane and is positive from the origin toward the HCS guide pin-receptacle combo. The Z-axis coincides with the NDS line of androgyny.

Y-axis: The Y-axis lies in the HCS mating plane and is positive from the origin pointing away from the NDS guide petal 1. The Y-axis coincides with the NDS line of symmetry.

3.7 NDS Component Numbering and Labeling

3.7.1 NDS Component Numbering

The docking system components are numbered. The numbering method is based on the following convention. Starting from the positive X-axis, the first component of a subsystem is labeled “1” with the next component being “2” in a counterclockwise fashion.

3.7.2 NDS Component Labeling

To aid operations, NDS includes some visible labels. For subsystems with the same quantity of components, a single zone label (e.g., “2”) represents all components in that zone, as shown in Figure 4-12: Guide Petal Removal – IVA Interface and Figure 4-27: NDS Resource Transfer.

3.8 NDS Berthing

The NDS, using a fully functional soft capture system, provides several capabilities compatible with typical robotic-assisted berthing requirements. Future NDS block upgrades will add certification for berthing. The primary berthing con-ops is for the Remote Manipulator System (RMS) to position the host vehicle within the NDS SCS capture envelope. The RMS will go into position hold. Then the NDS SCS will extend to achieve capture. Refer to To Be Specified (TBS)-217 for full NDS berthing con-ops.

Berthing refers to the process of using a robotic manipulator to mate two elements by means of a special purpose mechanism. The manipulator is based on one element that provides power and control and maneuvers the second element to allow the mating mechanisms to engage. [R.LIDS.1001]

This section is included in the IDD to provide a description of the planned capability.

a. NDS Soft Capture: The NDS is designed to capture and attenuate initial contact condition limits (refer to Table 4-1) that exceed those required by typical RMS berthing operations, including the Space Station Remote Manipulator System (SSRMS).

b. RMS Push Force: The NDS low impact technology SCS requires minimal force to align and capture. The force required to align the interfaces can be minimized through software configuration, and the compressive force resistance across the interface (refer to Section 4.1.2.5) is significantly less than the SSRMS specific capability as defined in the IDSS IDD.

c. RMS Moding: The NDS can be commanded by the host vehicle to pause, hold, and resume operations, commonly required to support RMS moding (e.g., changing from “position hold” to “limp” mode).

d. RMS Autosafing: The NDS can be commanded by the host vehicle to pause or stop operations (e.g., stopping ring retraction), upon the detection of RMS safing by the host vehicle.

e. Safing is a software state of an RMS in which motion (of joints or mechanisms) is stopped and brakes are applied (i.e., the system goes to what is generally a safe condition) either due to an operator command or due to the failure detection software response to certain failure indications where brake removal itself is inhibited/rejected requiring a command (cancel_safing) before the remove-brakes command will be accepted by the software.

f. RMS Backdrive: Specific to the SSRMS, it is likely that the RMS backdrive threshold exceeds the NDS capability and may require the RMS to utilize some type of follower mode in order to avoid backdriving beyond the NDS capability.

Verify that this is the correct version before use

4.0 NDS DOCKING INTERFACE

This section describes the interfaces for mating with the NDS or an NDS-compatible system. The figures and text show/describe interfaces between two NDS assemblies. However, any docking system that meets the NDS requirements in this section can mate with the NDS. Specific implementation differences for various NDS configurations will be noted where applicable.

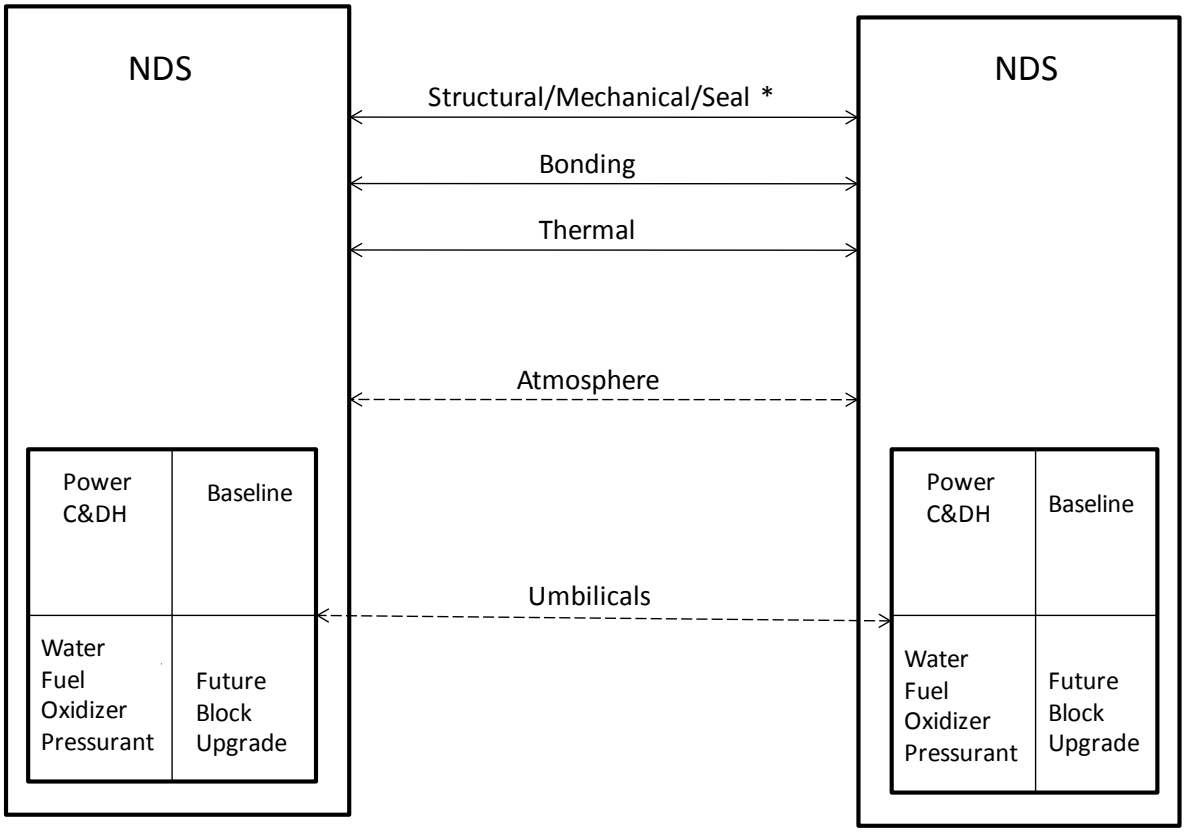

_____ Solid lines = functional interfaces
_ _ _ _ _ _ _ Dashed lines = pass-through resources vehicle-to-vehicle

Note:

* Seal is not on -302. Passive hooks and magnetic strikers are not available on -304. Therefore, -302 or -304 cannot dock to itself.

Figure 4-1: NDS Docking Interface Diagram

Verify that this is the correct version before use

4.1 Structural/Mechanical

When two NDS units dock, the initial connection occurs in the SCS between the magnets on the active mode NDS and the striker plates on the passive mode NDS. Once the soft capture phase is finished, the HCS on the active mode NDS completes the docking structural connection via the latch system. Any two NDS units can only mate with a unique relative clocking orientation, which is determined by the pair of adjacent guide pins and guide pin receptacles on the HCS, as shown in Figure 4-2: NDS Docking Interface. The volume and Keep Out Zones (KOZs) are defined in Figure 4-3: NDS Cross Section [R.LIDS.5003].

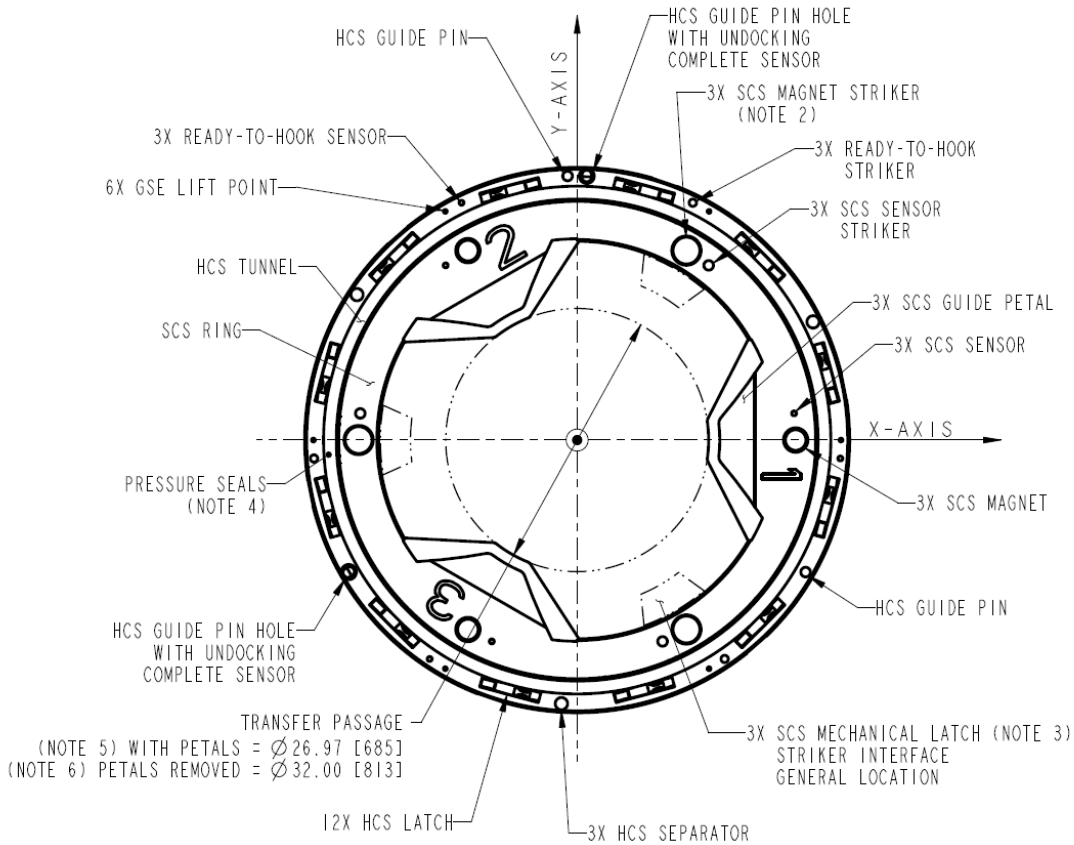

Notes:

1. General: For clarity, MMOD shield and umbilicals are not shown.
2. Not applicable for NDS (-304). (For a complete list of configuration differences, refer to Appendix E.)
3. Indicates allocated area for SCS mechanical latch implementation (this is not part of the NDS configuration).
4. Not applicable for NDS (-302). (See Appendix E.)
5. With petals configured for docking/undocking [R.LIDS.0082.1].
6. With petals removed for operations while mated [R.LIDS.0082].

Figure 4-2: NDS Docking Interface

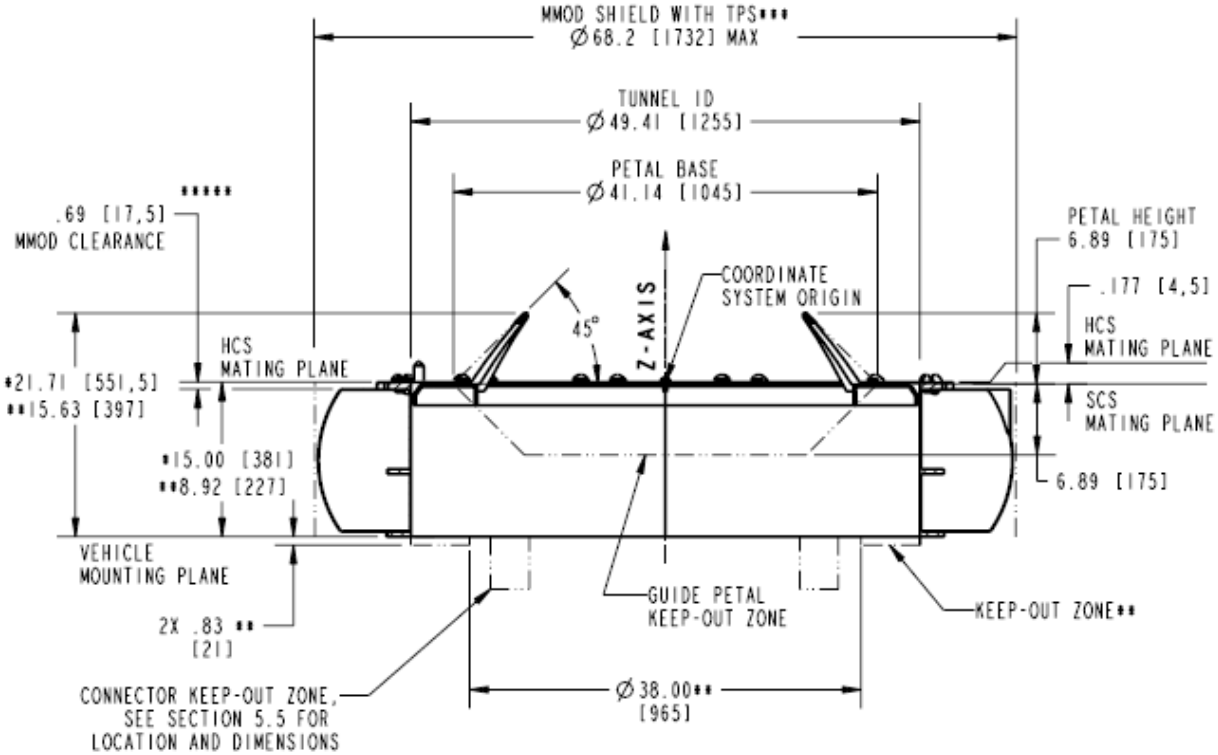

NDS Static Configuration

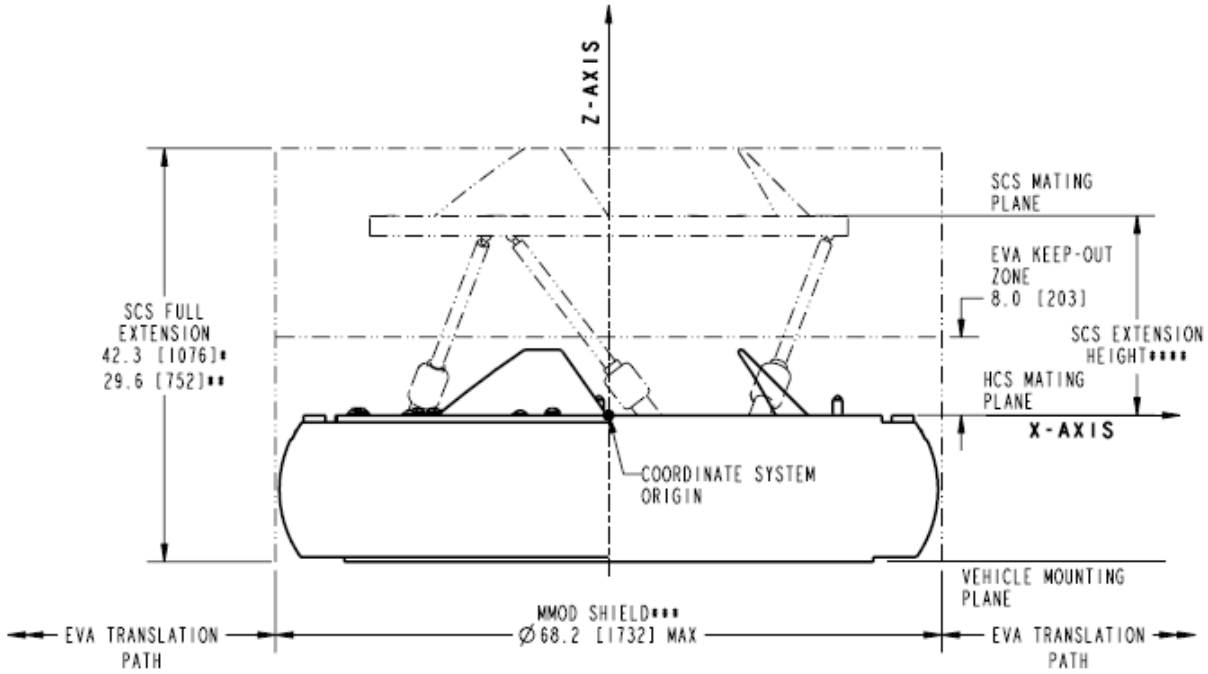

NDS Dynamic Configuration

Verify that this is the correct version before use

Notes:

Petals are shown symmetric about centerline for dimensioning purposes.

SCS full extension will be less when opposed to gravity.

* Applicable for NDS (excluding -302 and -305).

** Applicable for NDS (-302 and -305).

*** Diameter dimension includes MMOD shield and TPS. Metallic MMOD shield and TPS are not supplied for NDS (-302 and -305).

**** SCS extension height:

Maximum extension = 20.63 (524)

Reference ready-to-dock extension = 12.5 (317.)

***** MMOD shield axial KOZ height extended out to a diameter of 68 in. (1727 mm). It is acceptable to for the mounting flange on the shield to tunnel interface to violate this zone. Refer to Figure 5-2: NDS (-302 and -305) Host-Provided MMOD Interface [R.LIDS.1111].

Figure 4-3: NDS Cross Section [R.LIDS.5003]

4.1.1 Thermal Interface

The thermal environments and analysis approach is documented in JSC-65970, iLIDS Thermal and Induced Environments.

The thermal contact conductance across the NDS-to-NDS docking interface is defined as ranging from 15 Btu/hr-ft^2-°F (85 W/m^2-K) to 50 Btu/hr-ft^2-°F (284 W/m^2-K) for the metal-to-metal contact area [R.LIDS.5050].

The NDS utilizes heaters to condition/maintain temperatures above the minimum limits for each operating mode.

The allowable NDS-to-NDS interface acceptance temperature ranges for each operating condition are defined in the following subsections.

4.1.1.1 Non-Operational Survival

The following applies when the docking system is unmated under non-operational conditions. Only heaters are active at this point.

-65 °F to +192 °F (-54 °C to +89 °C)

<u>Minimum</u> – The defined minimum interface temperature of -65 °F (-54 °C) is defined by the minimum acceptance level dynamic seal survival temperature limit.

<u>Maximum</u> – The defined maximum interface temperature of +192 °F (+89 °C) is the lowest maximum acceptance level temperature limit for the NDS hardware.

Warning: Unmated NDSs in solar inertial attitudes with the NDS facing the sun are known to cause violations of operational and survival limits. In these attitude/ configuration conditions, time constraints will be imposed to protect the NDS. Refer to JSC-65978, iLIDS Thermal Data Book.

4.1.1.2 Operational

This subsection defines operational limits for the NDS. Individual components have capabilities outside these ranges. Specific component allowable limits will be defined in JSC-65978, iLIDS Thermal Data Book.

4.1.1.2.1 Tunnel and Seal Mating Interface

The following applies to the docking system (excluding the SCS) when the system is preparing to dock, up through hard mate, but prior to pressurization.

-38 °F to +122 °F (-39 °C to +50 °C)

Minimum – The minimum interface temperature of -38 °F (-39 °C) is defined by the minimum acceptance level seal operational temperature limit.

Maximum – The maximum interface temperature of +122 °F (+50 °C) is defined by the maximum acceptance level seal operational temperature limit.

The acceptance level seal operational temperature limits are defined as -38 °F to +122 °F (-39 °C to +50 °C). However, the allowable temperature differential between the sealing interfaces during docking hard capture may be restricted. If the temperatures are not within the defined boundaries, a thermal hold prior to hard latching is required until the temperature requirements are satisfied. This allowable temperature differential for hard mate is 100 °F (56 °C) and is based on the seal mating interface temperatures. The hard mate differential was determined by analysis based on a 100 °F (56 °C) maximum differential temperature allowed for soft capture guide petal engagement [R.LIDS.5061]. This differential can be assessed via mission profile analysis prior to docking. Figure 4-4: NDS Mating Interface Allowable Thermal Differential for Hard and Soft Capture [R.LIDS.5007] defines the boundaries of acceptable temperature regions for hard capture of the two mating interfaces.

Verify that this is the correct version before use

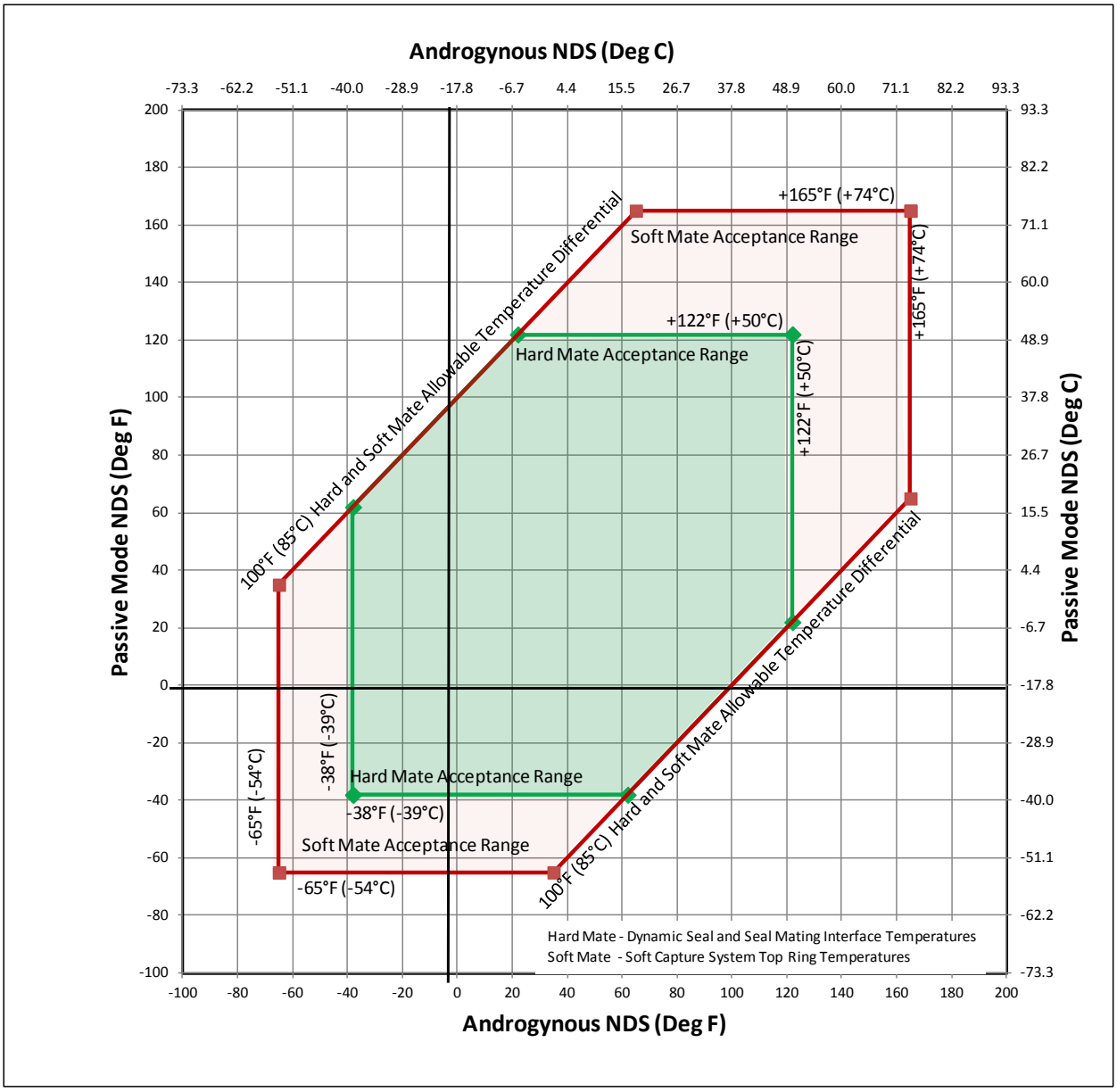

Figure 4-4: NDS Mating Interface Allowable Thermal Differential for Hard and Soft Capture [R.LIDS.5007]

4.1.1.2.2 Soft Capture Mating Interfaces

The following applies to soft capture components when the system is preparing to dock, up through hard mate, but prior to pressurization.

-65 °F to +165 °F (-54 °C to +74 °C)

The maximum differential allowed is 100 °F (56 °C) between the two mating interfaces for soft capture. The differential is based on top ring temperatures. This differential can be assessed via mission profile analysis prior to docking. This restriction is based on thermal expansion limits for the engagement of the mating guide petals in the mating NDS. Figure 4-4: NDS Mating Interface Allowable Thermal Differential for Hard and Soft

Capture [R.LIDS.5007] defines the boundaries of acceptable temperature regions for soft capture of the two mating interfaces.

Minimum – The minimum interface temperature of -65 °F (-54 °C) is defined by the minimum acceptance level potentiometer operational temperature limit.

Maximum – The maximum interface temperature of +165 °F (+74 °C) is defined by the maximum acceptance level load cell operational temperature limit.

4.1.1.3 Mated and Pressurized

This subsection defines steady-state mated and pressurized limits for the NDS after hard mate and pressurization.

4.1.1.3.1 Uncrewed Vehicles

The following is the steady-state temperature range after hard mate and pressurization for uncrewed vehicles.

+25 °F to +122 °F (-4 °C to +50 °C)

Minimum – The minimum temperature of +25 °F (-4 °C) is the minimum known dew point for uncrewed pressurized vehicles. However, this minimum interface temperature will be defined by the combined host and visiting vehicle dew point temperature. The known dew point temperature range for uncrewed vehicles is +25 °F to +75 °F (-4 °C to +23.9 °C). The NDS heaters will be capable of conditioning NDS above the +75 °F (+23.9 °C) maximum dew point temperature.

Maximum – The maximum temperature of +122 °F (+50 °C) is defined by the maximum acceptance level seal operational temperature limit.

4.1.1.3.2 Crewed Vehicles

The following is the steady-state temperature range after hard mate and pressurization for crewed vehicles.

+39 °F to +113 °F (+4 °C to +45 °C)

Minimum – The temperature of +39 °F (+4 °C) is the minimum bare-handed touch temperature for continuous contact. However, this interface temperature can be defined by the dew point temperature. The general defined dew point temperature range for crewed vehicles is +40 °F to +60 °F (+4.4 °C to +15.6 °C). Consequently, the minimum interface temperature could be as high as +60 °F (+15.6 °C) depending on the host and visiting vehicles combined dew point temperature. The NDS heaters shall be capable of conditioning NDS above the +60 °F (15.6 °C) maximum dew point temperature.

Maximum – The temperature of +113 °F (+45 °C) is the maximum bare-handed touch temperature for continuous contact.

4.1.1.3.3 Mated and Pressurized Steady-State Time Period

The time to reach steady-state temperature is dependent on the initial docking system temperature. Starting at low docking system temperatures, the worst case time to achieve this steady-state temperature could take up to 8 hours, using both heater

systems, and 13 hours for a single heater system. Analysis has shown that after hard mating, it can take as long as 8 hours in a cold environment for an NDS to warm up to the minimum dew point temperatures when starting from the minimum allowable operating temperatures. This warm up profile is shown in Figure 4-5: NDS Post Hard Mate Warm Up Profile. Pressurization or hatch opening is not restricted by the warm up profile, but condensation would result within the vestibule during this transition period. In addition, if hatch opening is required prior to the system achieving safe touch temperatures, the crew may be required to use Personal Protective Equipment (PPE). Refer to Nonconformance Compliance Report NCR-ISS-iLIDS-002 allowing early hatch opening.

For typical ISS dockings, assuming Torque Equilibrium Attitude (TEA), it is expected that the initial docking system temperature will be higher, as indicated in Figure 4-5.

The length of time to achieve the steady-state temperature could be reduced by changing the NDS heaters to the mated/pressurized set points prior to hard mate. This will heat the NDS above minimum operating temperatures. In this operation, the temperatures achieved prior to mating are dependent on the environment, heater power, and the time duration between the set point change and hard mating.

Starting at high docking system temperatures, the worst case time to achieve the +113 °F (+45 °C) IVA touch temperature could take up to 40 minutes. This cool down profile is shown in Figure 4-6: NDS Post Hard Mate Cool Down Profile.

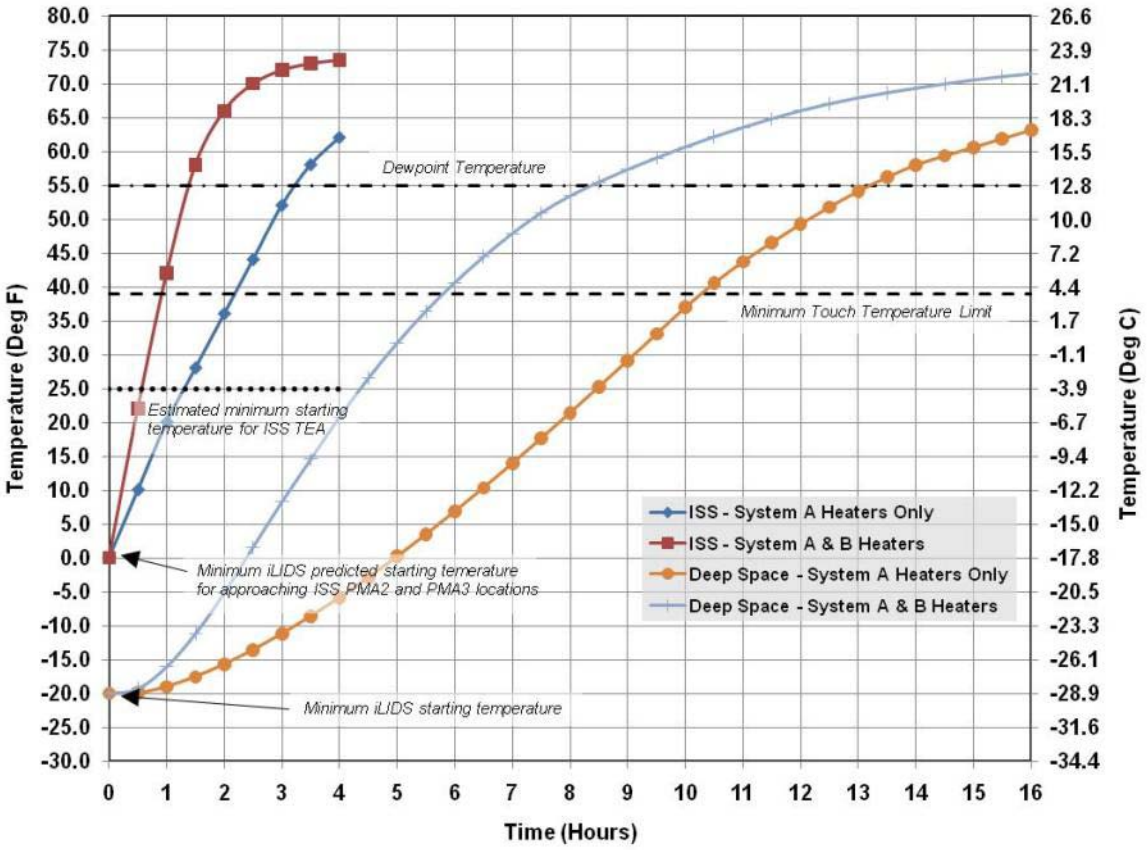

Figure 4-5: NDS Post Hard Mate Warm Up Profile

Verify that this is the correct version before use

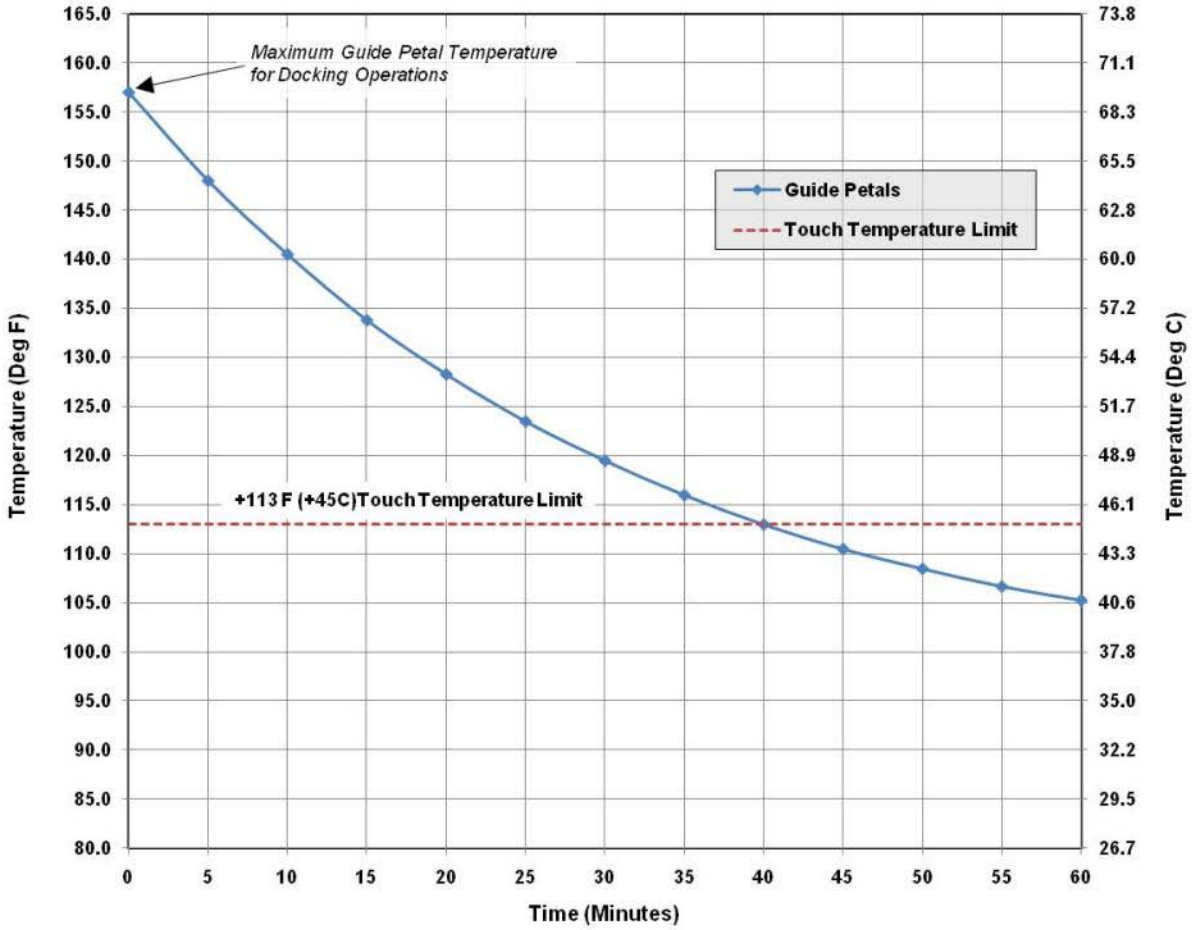

Figure 4-6: NDS Post Hard Mate Cool Down Profile

4.1.2 Soft Capture System

The NDS performs soft capture using electromagnets and magnetic striker plates. The detailed requirements for performance and properties of the electromagnets and magnetic striker plates are in SLZ29101641, Magnet with Dual Windings and Striker Plate Specification Control Drawing.

The passive mode NDS will also be scarred for future implementation of an SCS mechanical latch striker interface, which would allow an NDS-compatible docking system, using a passive SCS mechanical latch striker, to capture. Soft capture is not structural mating, but the first level of attachment in the docking sequence.

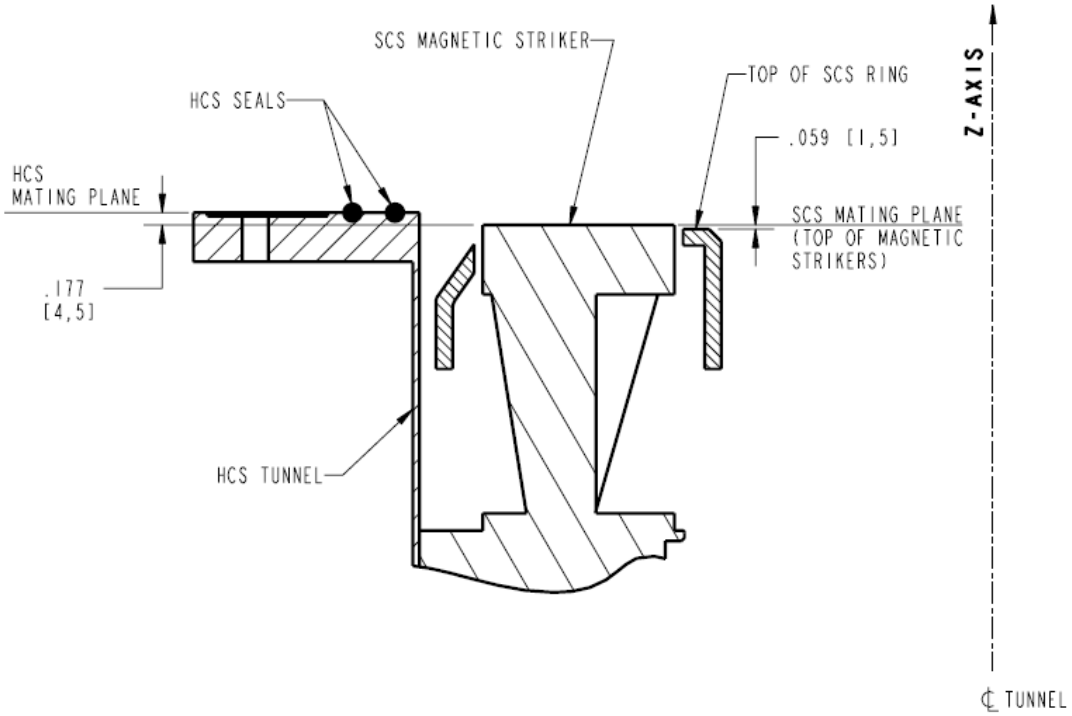

Note: Configuration shown is not applicable for NDS (-304).

Figure 4-7: NDS Capture Ring in Passive Mode [R.LIDS.5008]

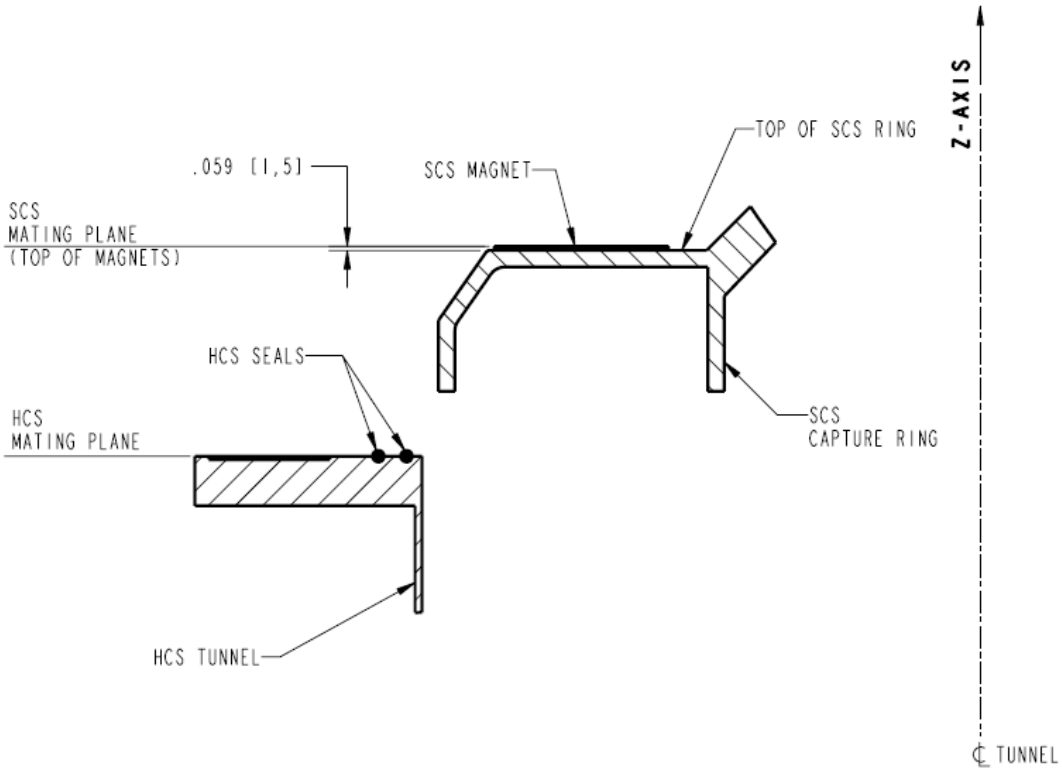

Figure 4-8: NDS Capture Ring in Active Mode [R.LIDS.5009]

Verify that this is the correct version before use

4.1.2.1 Guide Petal System

Three guide petals mount to the soft capture ring and face inward. The petals are equally spaced around the circumference of the soft capture docking ring. A representative depiction of the guide petal layout can be seen in Figure 4-9: SCS Guide Petal System [R.LIDS.5010], Figure 4-10: SCS Guide Petal System Detail [R.LIDS.5011], and Figure 4-11: SCS Feature Definition [R.LIDS.5012]. The stiffness and hardness characteristics of the guide petals also impact capture performance. Hosts with other docking systems must either match the NDS petal design (Refer to SDZ29101861 Guide Petal Drawing) or prove that their design has equivalent hardness and stiffness characteristics. The guide petals are Intravehicular Activity (IVA) removable via captive fasteners with a standard double-head height 7/16-inch hex head. Refer to Figure 4-12: Guide Petal Removal – IVA Interface for details. See also SKZ29101796, NDS Guide Petal Removal/Installation Procedure.

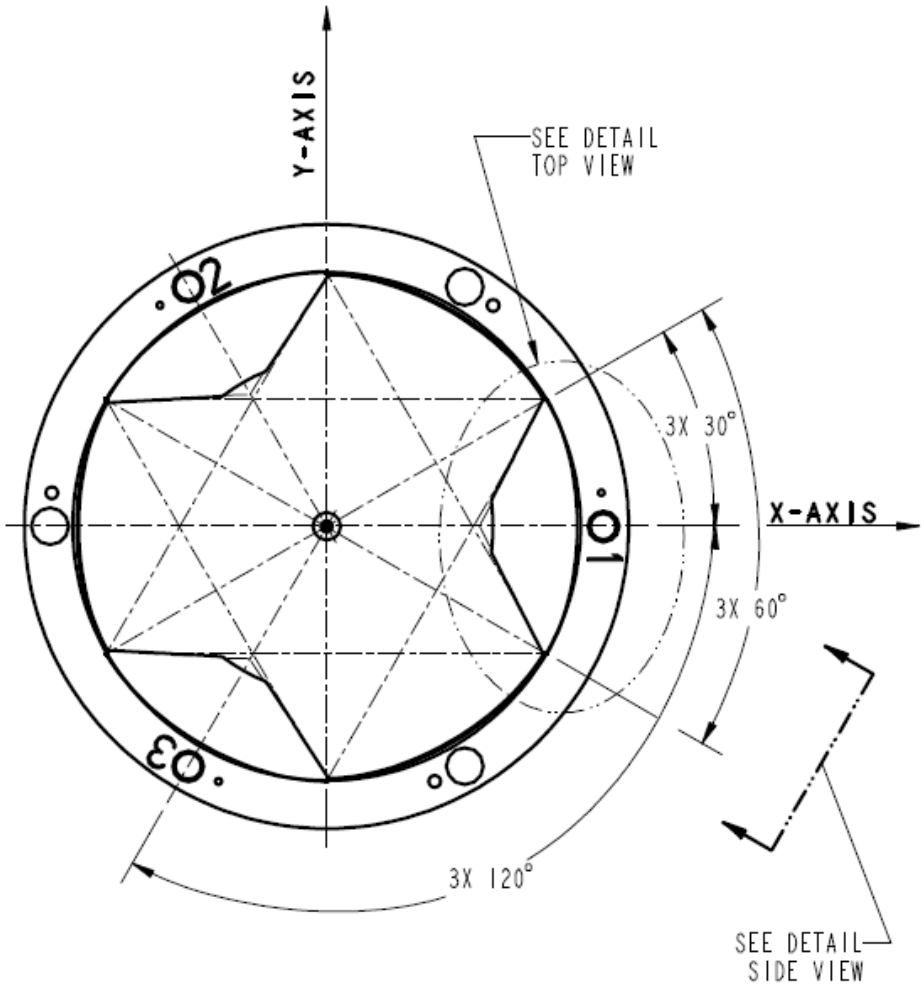

Figure 4-9: SCS Guide Petal System [R.LIDS.5010]

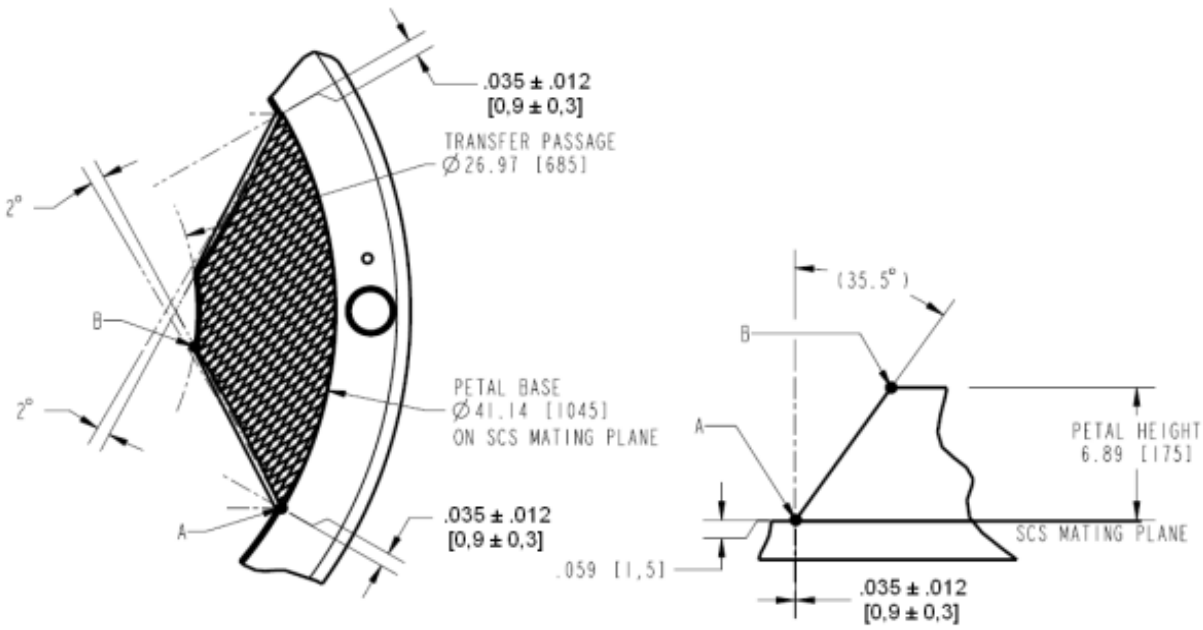

Detail Top View

Detail Side View

Figure 4-10: SCS Guide Petal System Detail [R.LIDS.5011]

4.1.2.2 Soft Capture Ring

The dimensions of SCS ring features are defined in Figure 4-11. The SCS ring, in passive mode, is located as depicted in Figure 4-7. The SCS ring, in active mode, is actuated above the mating plane for soft capture as depicted in Figure 4-8.

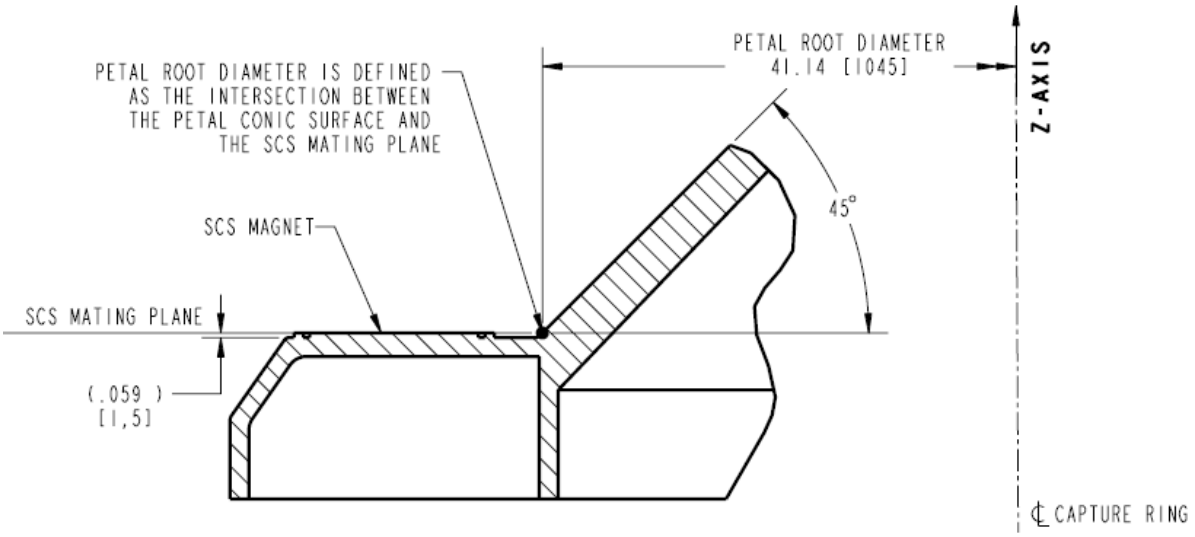

Definition of SCS Mating Plane

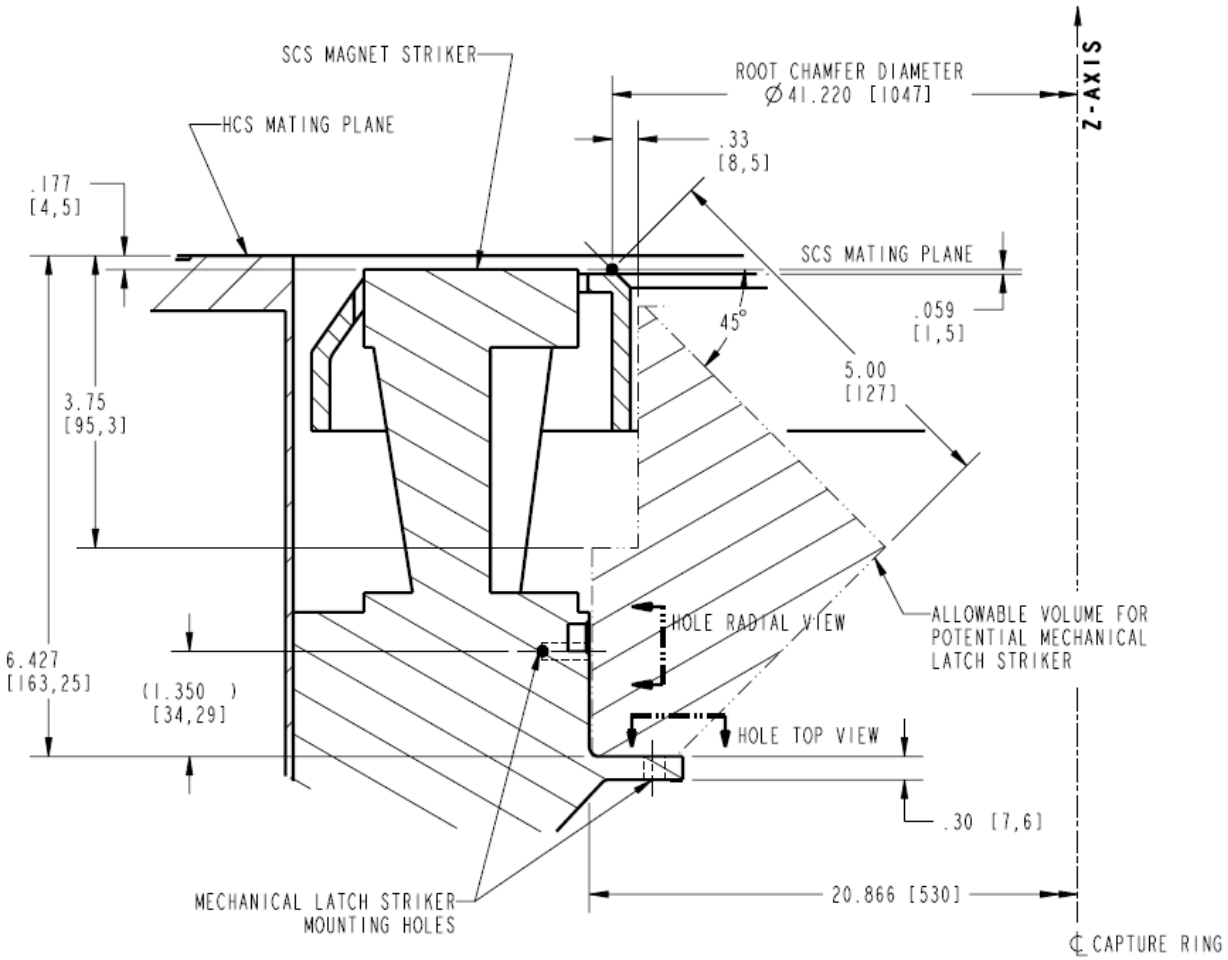

Potential Mechanical Latch Striker Interface

(Page 1 of 2)

Verify that this is the correct version before use

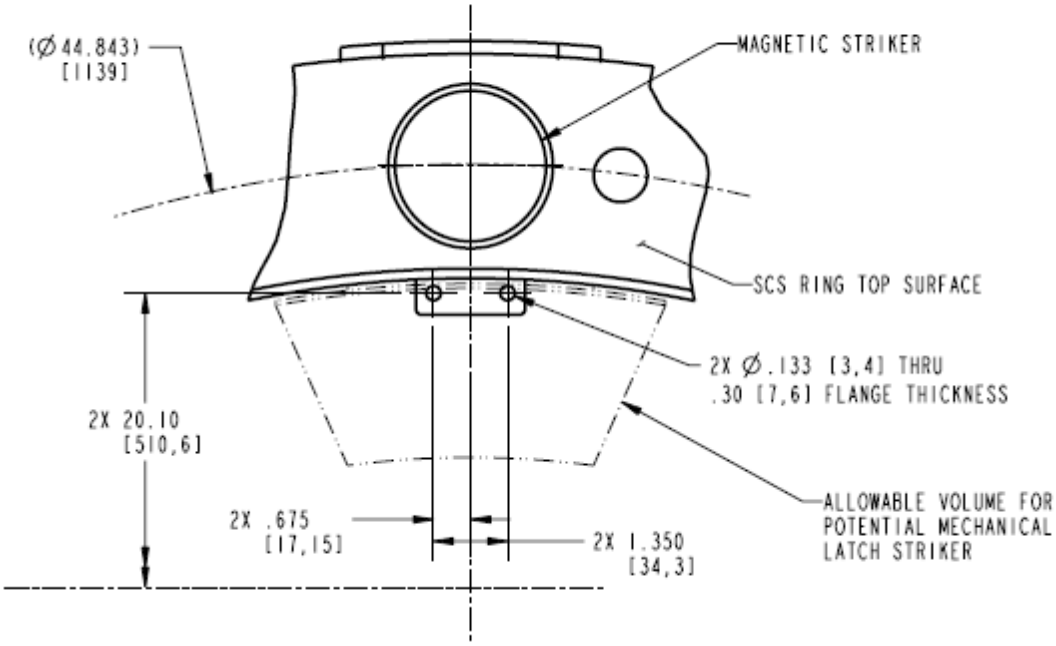

Mechanical Latch Striker Mounting Hole Top View

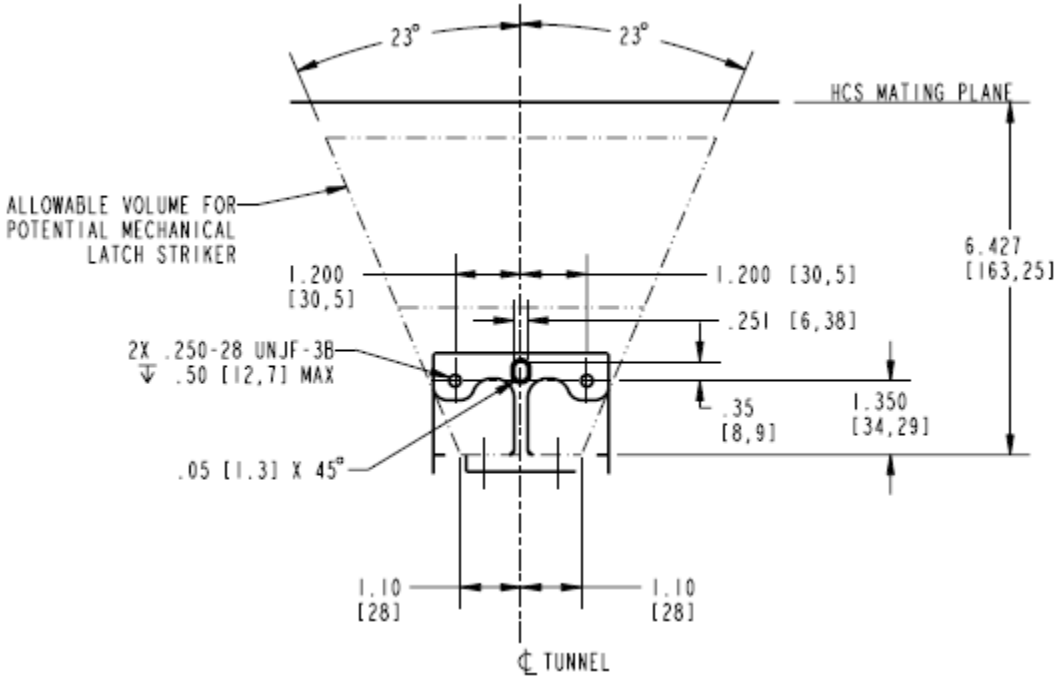

Mechanical Latch Striker Mounting Hole Radial View

(Page 2 of 2)

Figure 4-11: SCS Feature Definition [R.LIDS.5012]

Verify that this is the correct version before use

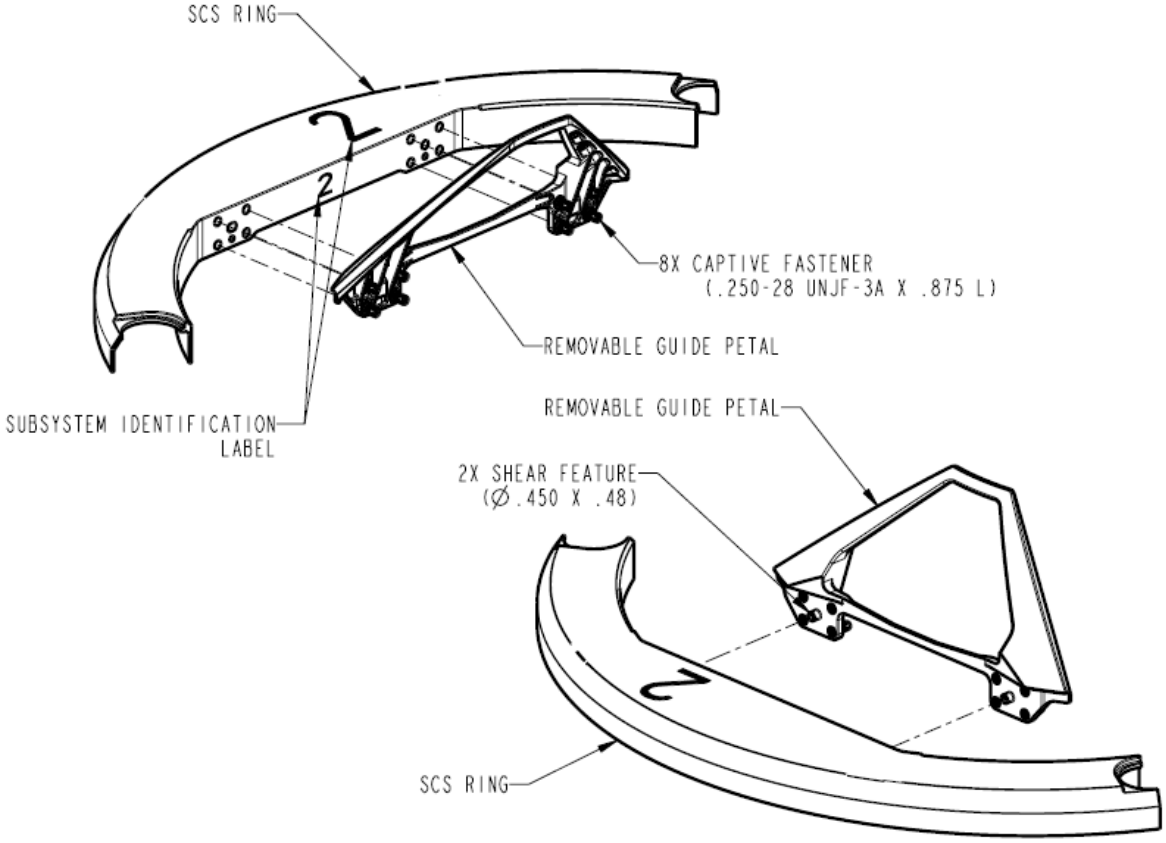

Figure 4-12: Guide Petal Removal – IVA Interface

4.1.2.3 Magnet and Striker

The SCS employs three magnets and three striker plates distributed across the soft capture ring, as defined in Figure 4-13: SCS Magnetic Capture System [R.LIDS.5013]. The striker must provide a minimum of 2° rotational compliance from X-Y plane [R.LIDS.5013]. For a detailed description of NDS magnet and striker implementation, refer to SLZ29101641, Magnet With Dual Windings and Striker Plate Specification Control Drawing.

Per this figure, the three striker plates across the soft capture ring are not applicable for the NDS (-304) configuration. The SCS striker in passive mode elevation, relative to the SCS ring, must be as depicted in Figure 4-7. The SCS striker in active mode elevation, relative to the SCS ring, must be as depicted in Figure 4-8.

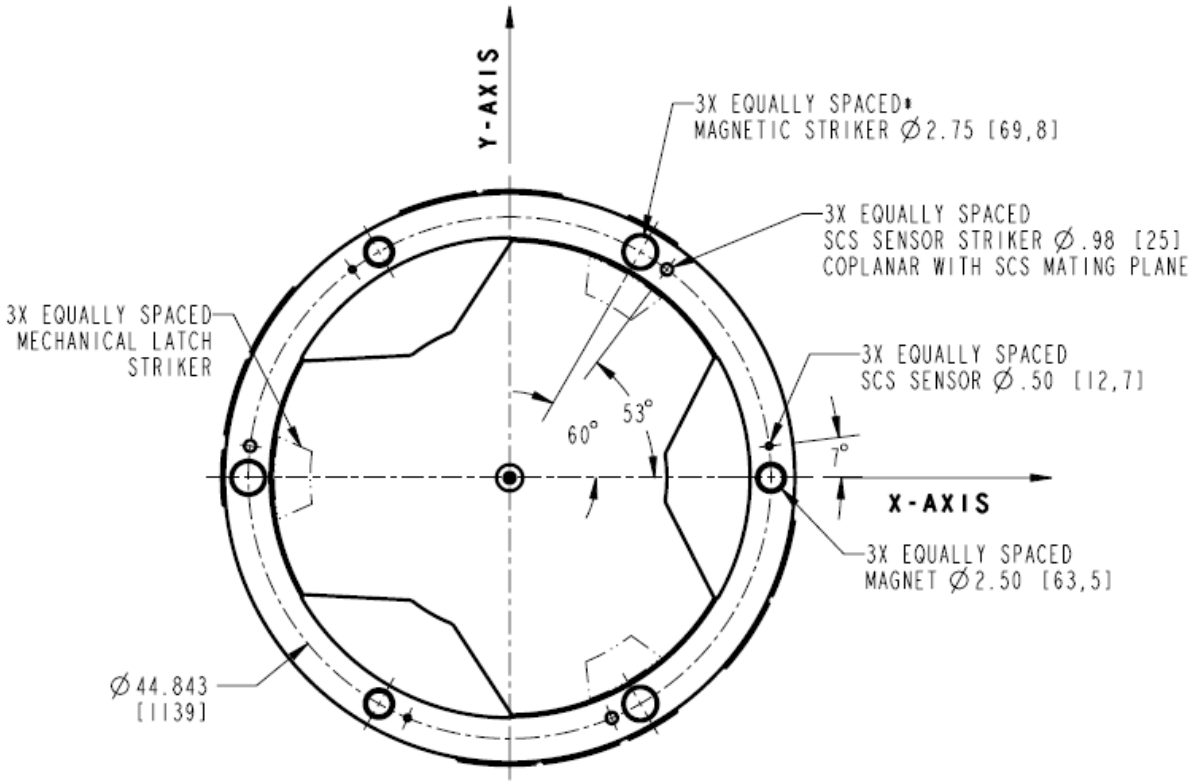

Note:

* Not applicable for NDS (-304).

Figure 4-13: SCS Magnetic Capture System [R.LIDS.5013]

4.1.2.4 Soft Capture Sensors and Strikers

The SCS of the docking system provides an indication when the two SCS mating planes become coplanar through the use of position sensors. These sensors trigger the energization of the electromagnets, which creates the soft capture holding force. The NDS has three soft capture indication positions, located at an offset from the magnet/striker centerline as defined in Figure 4-13.

4.1.2.5 Pre-capture SCS Compressive Force Resistance

The low impact technology SCS requires minimal compressive force resistance across the interface prior to capture. To maximize the benefit of low impact technology, a maximum of 12 lbf (53.38 N) compressive force resistance is allowed across the interface. This means each side is allowed to have a maximum of 6 lbf (26.69 N) resistance. This resistance might include magnet striker compliance mechanisms, SCS capture sensors, and any other sources of compressive force resistance [R.LIDS.5014].

4.1.2.6 SCS Mechanical Latch Striker

All NDS configurations have reserved volume for potential implementation of SCS mechanical latch strikers, which would allow other IDSS-compatible docking systems

that use SCS mechanical latches to dock to an NDS. This is not structural mating, but the first level of attachment. All NDS configurations have reserved volume, as defined in Figure 4-11 located as depicted in Figure 4-2.

4.1.2.7 Capture Envelope

See Table 4-1: NDS Initial Contact Conditions “Design To” Limits.

Table 4-1: NDS Initial Contact Conditions “Design To” Limits [R.LIDS.0063]

Initial Conditions	Limiting Value
Closing (axial) rate	0.05 to 0.15 ft/s (0.015 to 0.045 m/s)
Lateral (radial) rate	0.15 ft/sec (4) (0.045 m/s)
Angular rate	0.15 deg/sec about NDS X axis; vector sum of 0.15 deg/sec about NDS Y and Z axes
Lateral (radial) misalignment	4.2 ± .125 in. [106 ± 3 mm]
Angular misalignment	4.0 ± .25 degrees about NDS X axis; vector sum of 4.0 ± .25 degrees about NDS Y and Z axes

Notes:

1. Initial conditions to be applied simultaneously.
2. The NDS will use a right-hand orthogonal body coordinate system, the origin of which lies in the intersection of the NDS cylindrical center line X-axis and HCS mating plane (refer to Figure 4-3).
3. These initial conditions are applicable for the docking of a chaser host vehicle with a mass of at least 1000 slugs (15000 kg), but no greater than 1700 slugs (25000 kg), to a target vehicle with a mass of at least 24000 slugs (350000 kg). It is assumed the chaser host vehicle has no lateral center of gravity offset.
4. Lateral (radial) rate limit includes combined lateral and rotational rates of both vehicles.
5. In order to achieve capture with these initial conditions, it may be necessary for Post Contact Thrust (PCT) firing with TBD-46 properties.
6. For performance analyses, the host vehicle will use a 15-degree max cone angle excursion wobble angle during capture and attenuation.
7. If performance analysis results require a tighter wobble limit, host vehicles must coordinate with the NDS team and the mating host vehicle to perform integrated analysis specific to the host vehicle to negotiate performance parameters.

4.1.3 Hard Capture System

The HCS facilitates a hard capture (i.e., when two vehicles are structurally mated, sealing is complete, and the vestibule is ready for pressurization and hatch opening).

4.1.3.1 Tunnel

For tunnel interfaces refer to Figure 4-14: HCS Docking Interface [R.LIDS.0029], Figure 4-15: NDS (excluding -302) HCS Mating Plane Seal and Electrical Bonding Details, and Figure 4-16: NDS (-302) HCS Mating Plane Seal and Electrical Bonding Details.

Verify that this is the correct version before use

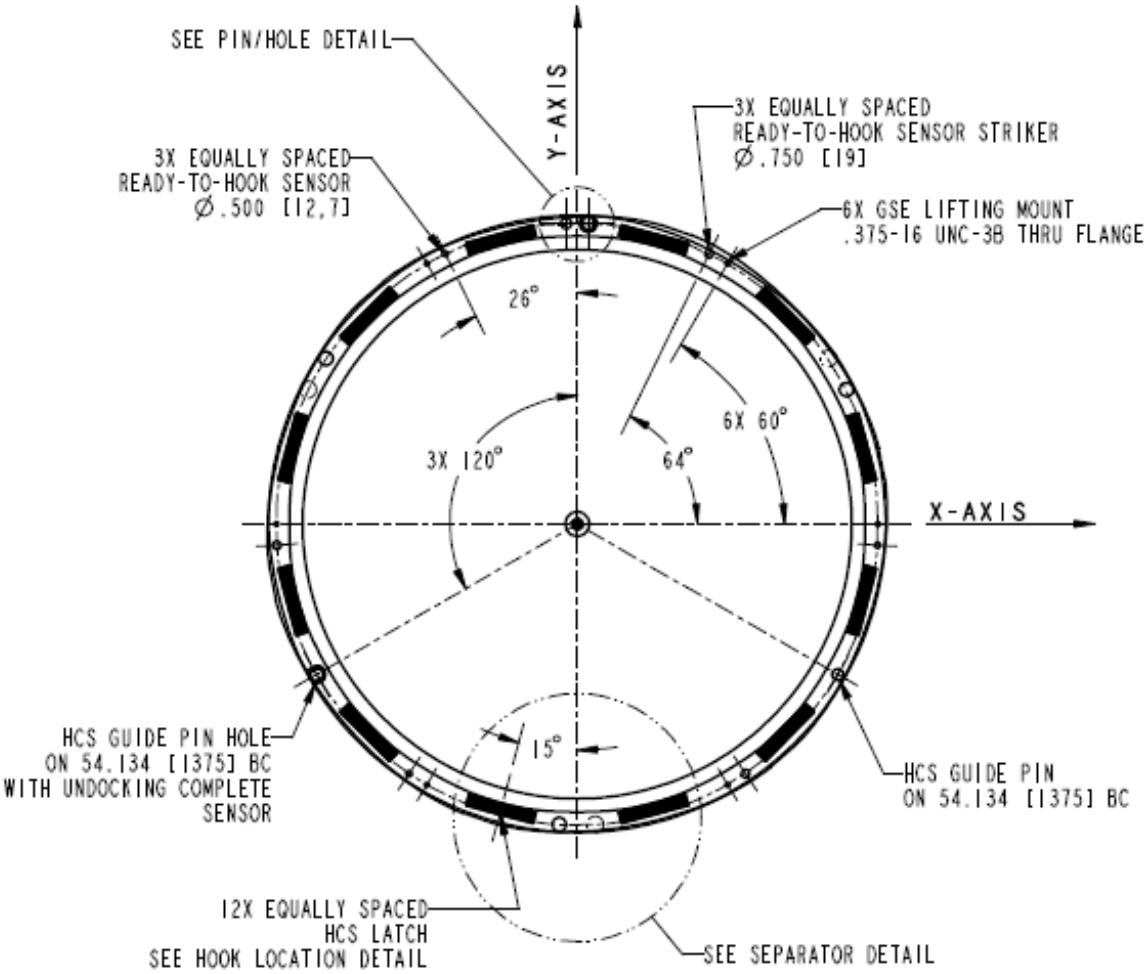

HCS Component Interface Definition

(Page 1 of 2)

Verify that this is the correct version before use

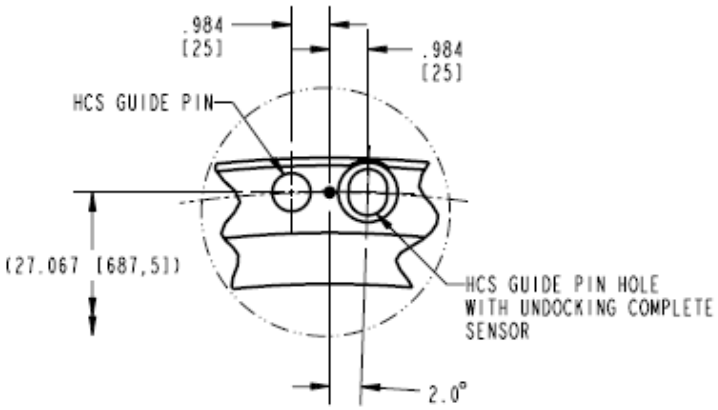

Pin/Hole Detail View

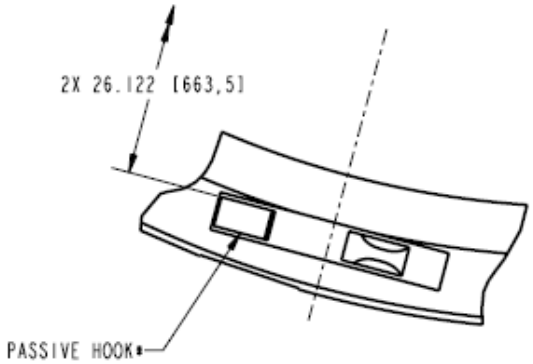

Hook Location Detail View

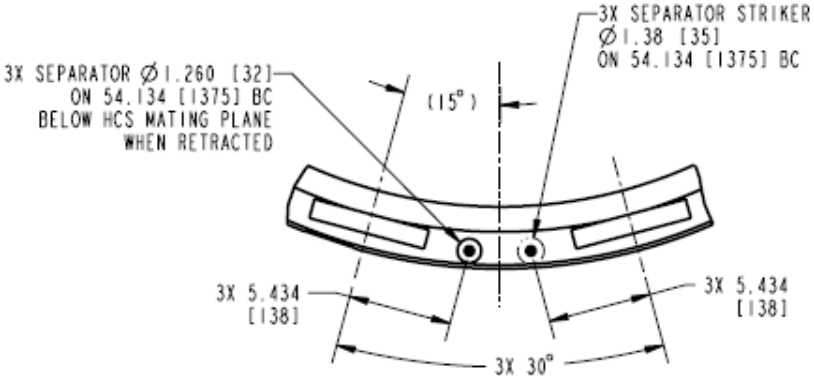

Separator Detail View

(Page 2 of 2)

Note: *Not applicable for NDS (-304).

Figure 4-14: HCS Docking Interface [R.LIDS.0029]

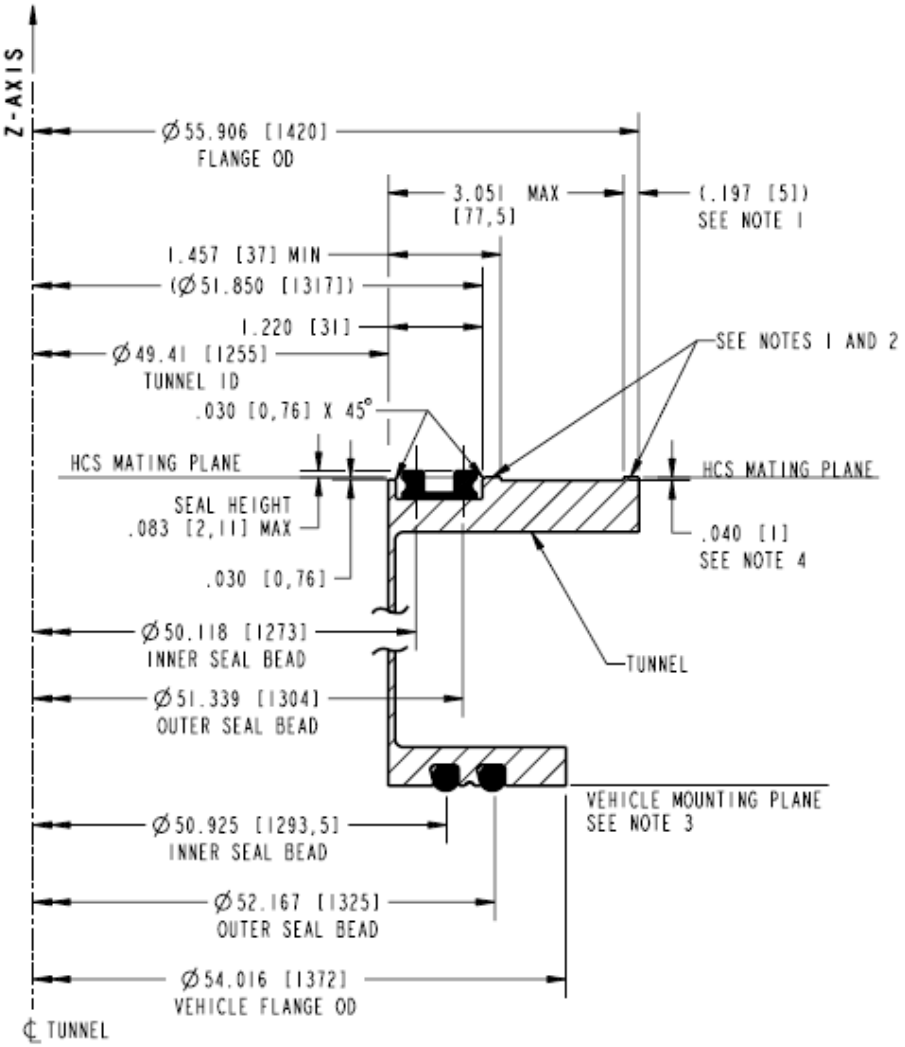

Notes:

1. Chemical conversion coat per MIL-DTL-5541, TYPE 1, Class 3.
2. Global surface flatness not to exceed .010 [0.25] on indicated surface.
   a. Local surface flatness not to exceed .003 [0.08] across any area on indicated annular surface
      [Outer Diameter (O.D.) = 54.075 [1373]; Inner Diameter (I.D.) = 52.32 [1329] for an arbitrary 30° arc, except for the .039 [1] recessed area.
3. Global surface flatness not to exceed .010 [0.25] on indicated surface.
   a. Local surface flatness not to exceed .003 [0.08] across any area on indicated annular surface
      O.D.= 54.016 [1372]; I.D. = 49.41 [1255] for an arbitrary 30° arc.
4. Recessed dimension .040 [1] applies for striker zones indicated in Figure 4-14: HCS Docking Interface [R.LIDS.0029].

Figure 4-15: NDS (excluding -302) HCS Mating Plane Seal and Electrical Bonding Details [R.LIDS.1006]

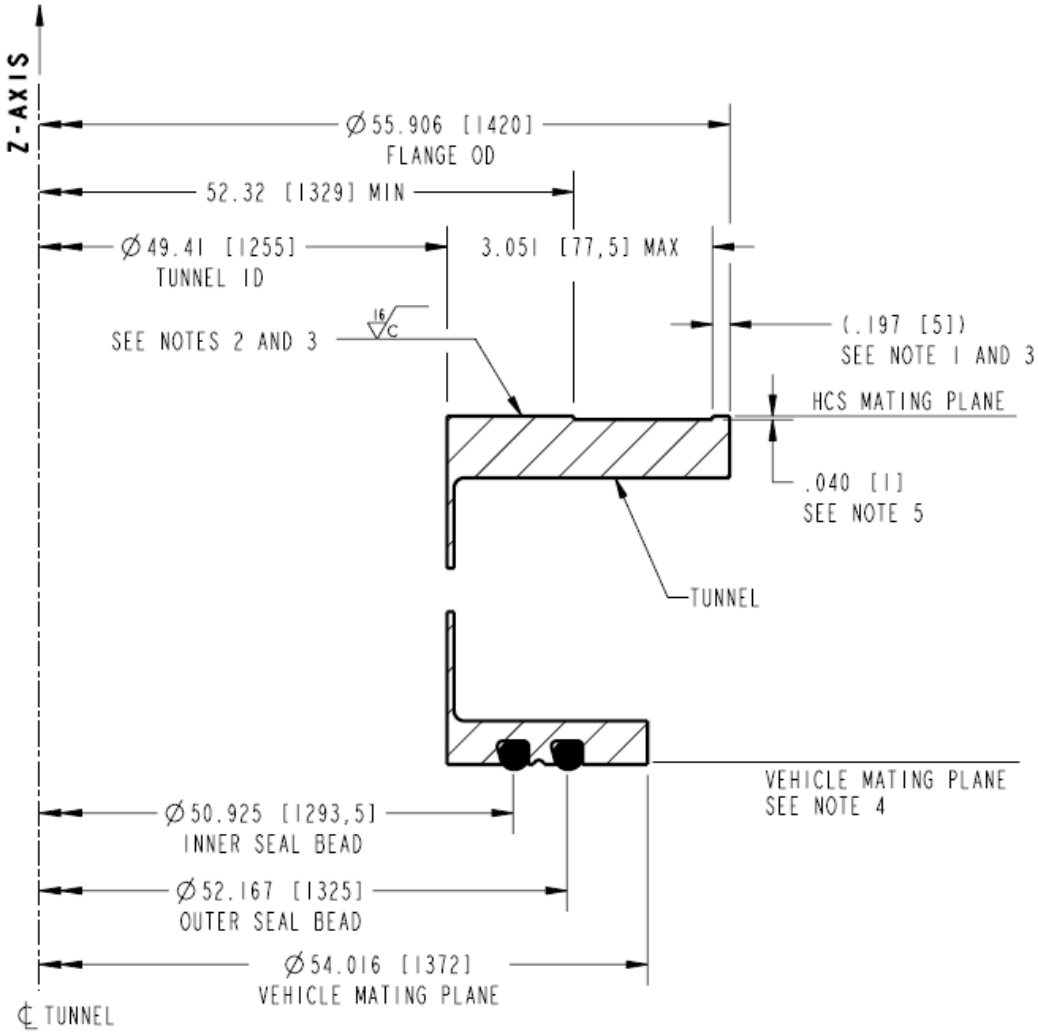

Notes:

1. Chemical conversion coat per MIL-DTL-5541, Type 1, Class 3.
   Surface finish applicable prior to metal finish.
2. Anodize per MIL-A-8625, Type II, Class 1, using hot water seal.
3. Global surface flatness not to exceed .010 [0.25] on indicated surface.
   Local surface flatness not to exceed .003 [0.08] across any area on indicated annular surface [O.D. = 55.906 [1420]; I.D. =49.41 [1255] for an arbitrary 30° arc, except for the .040 [1] recessed area.
4. Global surface flatness not to exceed .010 [0.25] on indicated surface.
   Local surface flatness not to exceed .003 [0.08] across any area on indicated annular surface [O.D. = 54.016 [1372]; I.D. = 49.41 [1255] for an arbitrary 30° arc.
5. Recessed dimension .040 [1] only applies for striker zones indicated in Figure 4-14: HCS Docking Interface [R.LIDS.0029].

Figure 4-16: NDS (-302) HCS Mating Plane Seal and Electrical Bonding Details [R.LIDS.1007]

4.1.3.2 Seal

The HCS of the NDS accommodates a seal-on-seal interface and a seal-on-metal interface with two concentric seals at specified diameters. The NDS has the pressure seal interfaces located internally with respect to the tangential hook location. For seal-on-seal interfaces, refer to Figure 4-14: HCS Docking Interface [R.LIDS.0029]. For seal-on-metal interfaces, refer to Figure 4-15: NDS (excluding -302) HCS Mating Plane Seal and Electrical Bonding Details [R.LIDS.1006].

4.1.3.3 Guide Pins and Receptacles

The NDS has two guide pins and two guide pin receptacles, as illustrated in Figure 4-14: HCS Docking Interface [R.LIDS.0029], for final alignment of the hard-mate interface. Refer to Figure 4-17: HCS Guide Pin Detail and Figure 4-18: HCS Guide Pin Hole Detail.

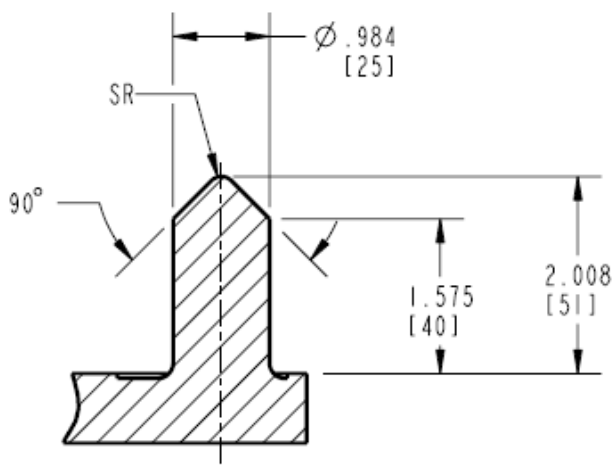

Figure 4-17: HCS Guide Pin Detail [R.LIDS.1005]

Verify that this is the correct version before use

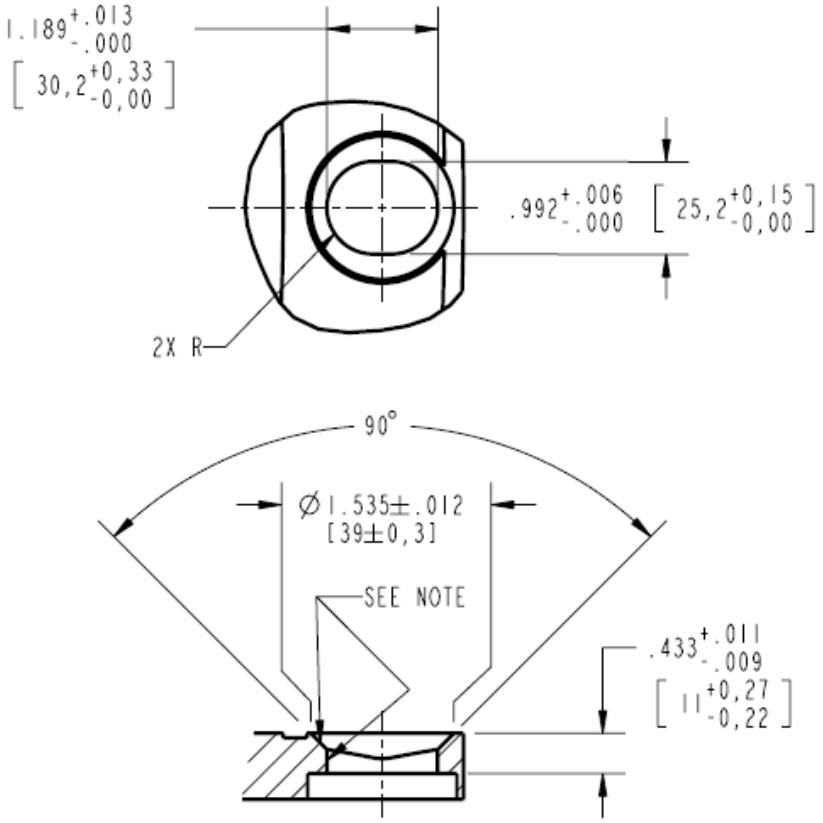

Note: Dry-film lubricant Everlube 620C (Manufacturer CAGE Code 8F024) on the locations shown where Guide Pin contact may occur.

Figure 4-18: HCS Guide Pin Hole Detail [R.LIDS.1005.1]

4.1.3.4 Hard Capture Hooks

The NDS is configured with tangential hooks on the HCS. The NDS (excluding -304), when mated, has 24 attachment points where 12 active hooks on one system engage 12 passive hooks on the mating system to carry nominal loads. Refer to Figure 4-19: HCS Hook Configurations [R.LIDS.0029] and Figure 4-14: HCS Docking Interface [R.LIDS.0029]. The 12 active hooks can be driven in two gangs of 6 that form an alternating pattern (i.e., every other hook). The -304 does not include the 12 passive hooks. Each of the 12-hook pair locations on the HCS has 1 passive and 1 active hook assembly. The NDS implements a spring-biased self-compliance passive hook between the mating active-passive hook pair. Refer to Figure 4-14: HCS Docking Interface [R.LIDS.0029], Figure 4-20: HCS Active Hook Detail [R.LIDS.1124], and Figure 4-21: HCS Passive Hook Detail. The hook motion envelope is defined in Figure 4-22: HCS Active Hook Motion Envelope.

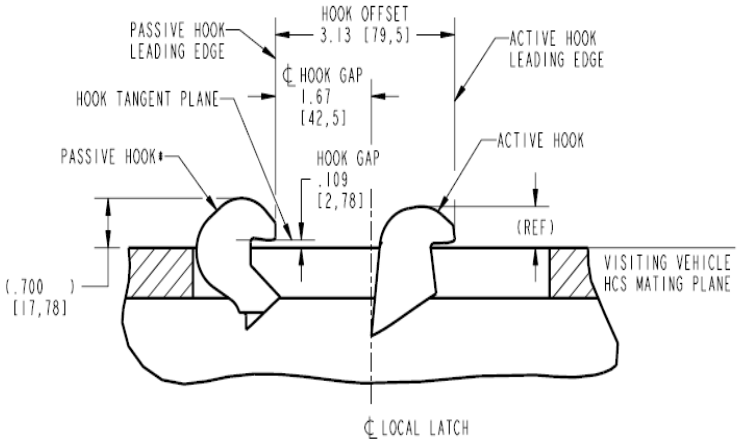

Ready-To-Dock Configuration

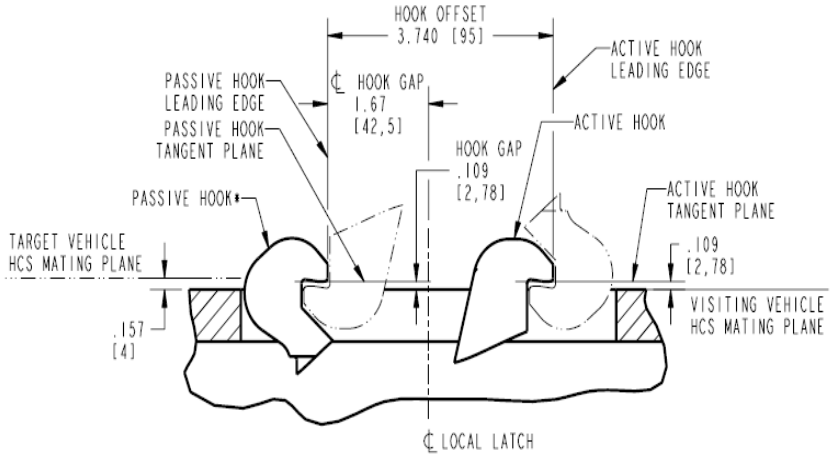

Ready-To-Hook Configuration

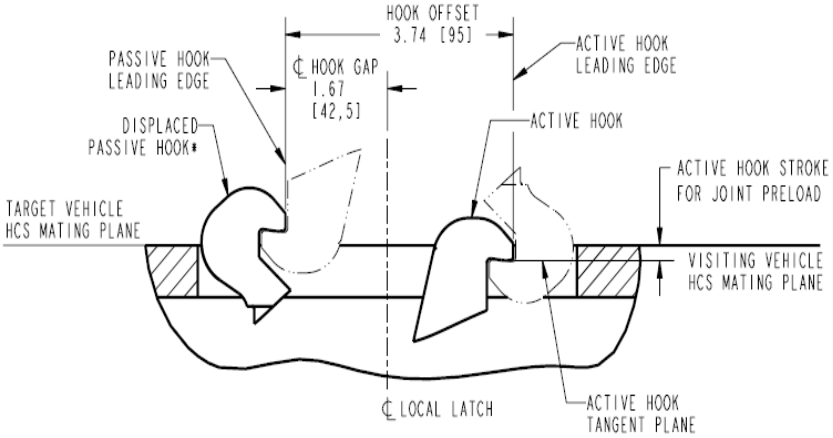

Fully Mated Configuration

Note: *Spring loaded passive hook has a minimum stroke of .315 in. (8 mm). Passive hook is excluded from NDS (-304).

Figure 4-19: HCS Hook Configurations [R.LIDS.0029]

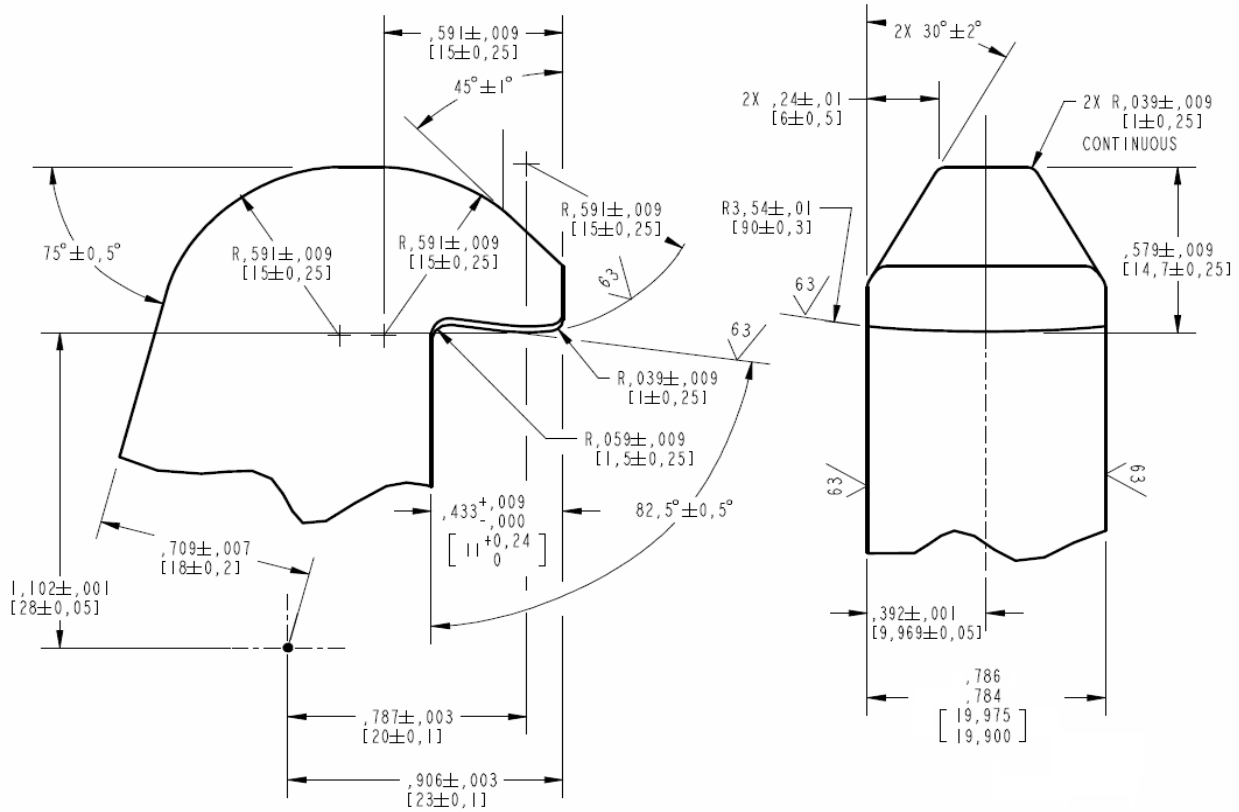

Note: See previous page for ready-to-dock, ready-to-hook, and fully mated configurations.

Figure 4-20: HCS Active Hook Detail [R.LIDS.1124]

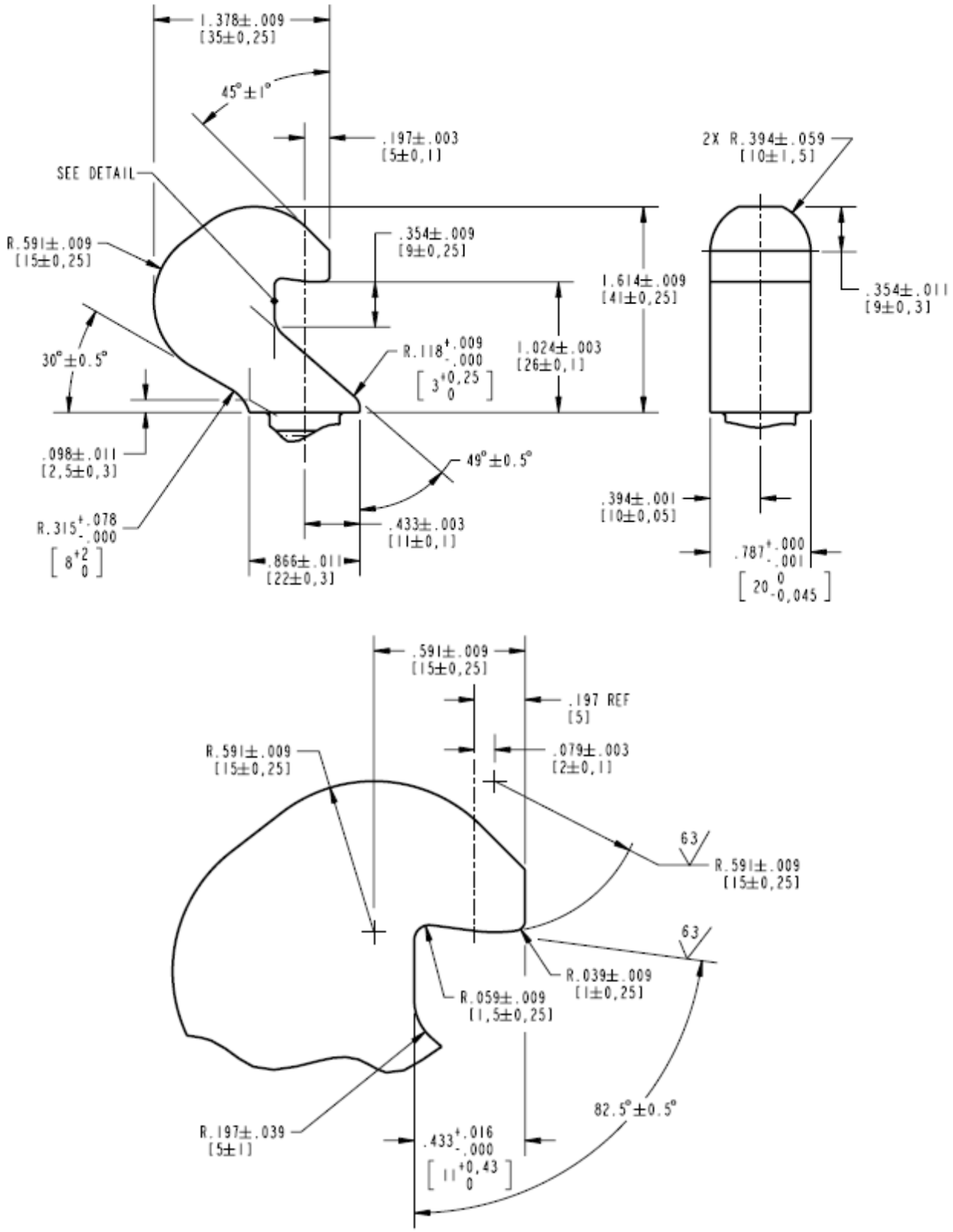

Detail View

Figure 4-21: HCS Passive Hook Detail (Excluding -304) [R.LIDS.1125]

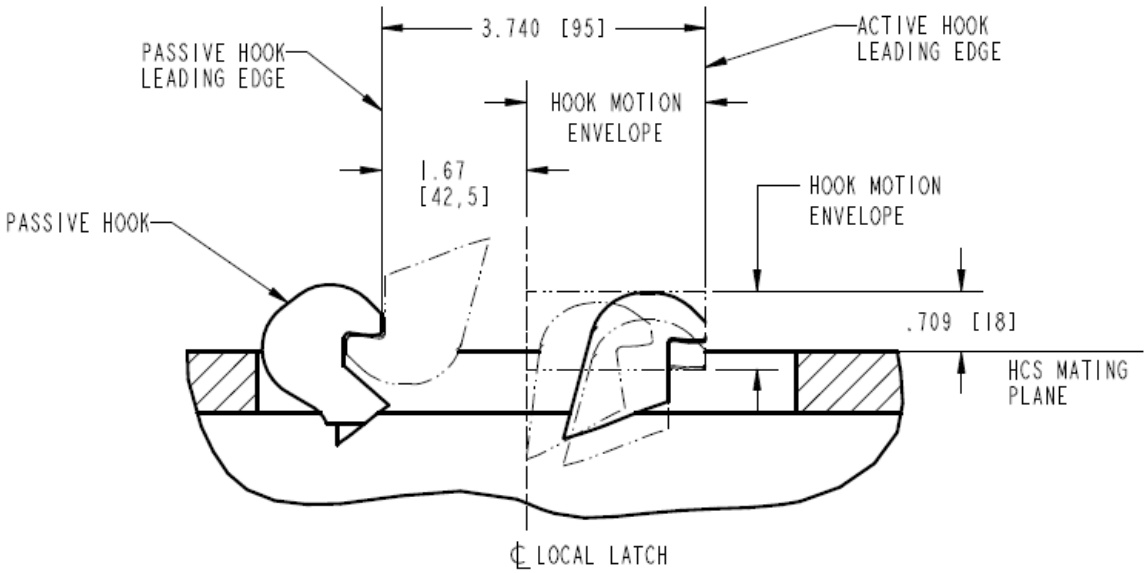

Figure 4-22: HCS Active Hook Motion Envelope

The Hook System is defined as the serial combination of the Active Hook Mechanism, the Passive Hook Mechanism, and the structural elements that are in compression.

a. The Preload of the Hook System after locking shall be between the following values:

   Minimum Preload of Hook System after locking = 7037 lbf (31300 N)
   Maximum Preload of Hook System after locking = 9968 lbf (44340 N)

b. The Design Limit Capability of the Active and Passive Hook element shall be = 11240 lbf (50000 N).

c. The load response (stiffness) of the Active Hard Capture Hook Mechanism shall be between the upper and lower curves, as defined in Figure 4-23: Load Response of Active Hook Mechanism.

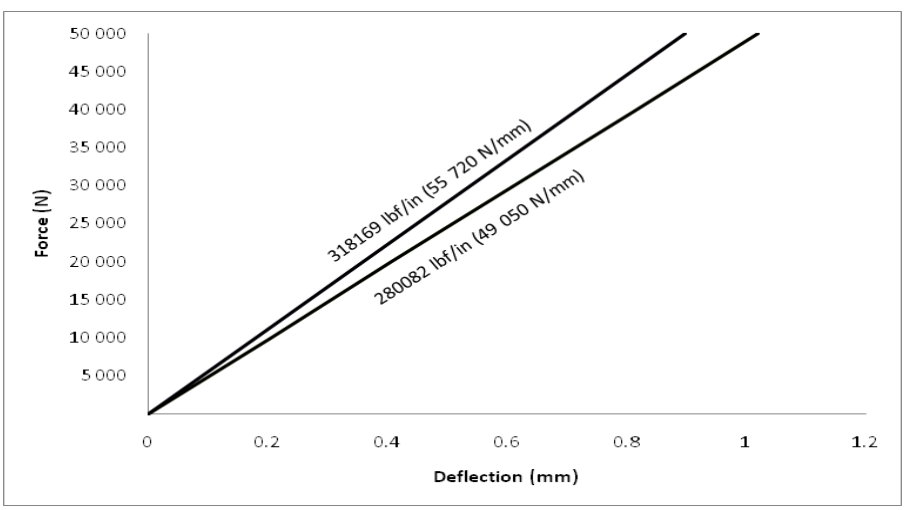

Figure 4-23: Load Response of Active Hook Mechanism

Verify that this is the correct version before use

d. The load response (stiffness) of the Passive Hard Capture Hook Mechanism shall be between the upper and lower curves, as defined in Figure 4-24: Load Response of Passive Hook Mechanism (Including Spring Washer Stack) Hard Capture Sensors and Strikers.

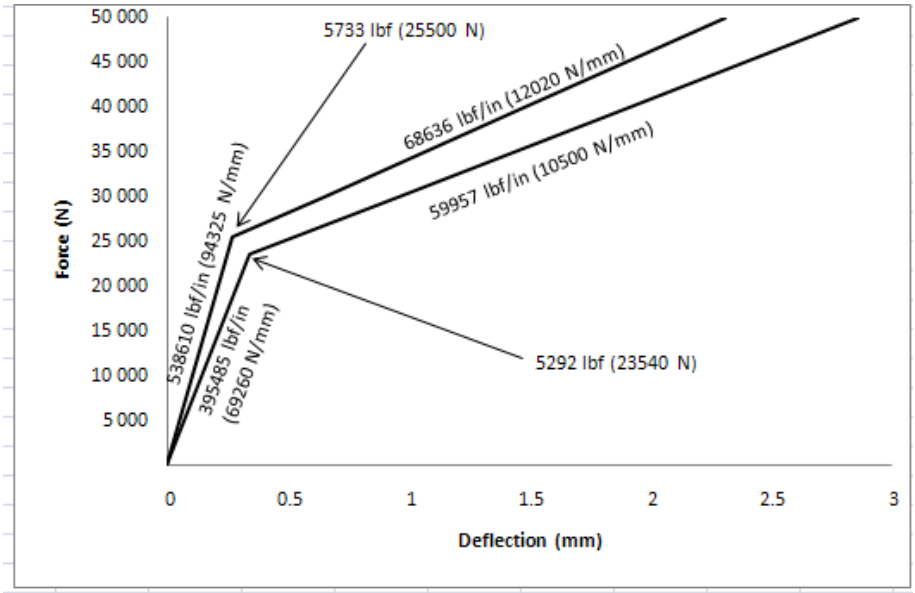

Figure 4-24: Load Response of Passive Hook Mechanism (Including Spring Washer Stack) Hard Capture Sensors and Strikers

The NDS has a Ready-to-Hook (RTH) indication capability achieved by having RTH sensors and strikers. There are three RTH sensors and three striker locations, which reside 120 degrees from one another on the hard capture tunnel. The NDS also has hook position sensors, which indicate the active hook is fully open, fully closed, and the hook is locked in the overcenter position. Refer to Figure 4-14.

The striker zones for RTH sensors are recessed below the HCS mating plane, as illustrated in Figure 4-15 and Figure 4-16. The RTH activation point above the HCS mating plane is 0.157 in. (4 mm).

4.1.3.5 Undocking Complete Sensors and Strikers

The NDS has an undocking complete indication capability achieved by having an undocking-complete sensor. There are two sensor locations that correspond to the guide pin receptacle locations. The two NDS undocking complete sensors indicate when the guide pin has cleared the receptacles. The guide pins on the mating docking system are used as striker areas for undocking-complete sensors. Refer to Figure 4-14 for the location of the separation system. The sensors indicate that undocking is complete at a separation distance of ~1.18 in. (~30 mm).

4.1.3.6 HCS Compressive Force Resistance During SCS Retraction

The low impact technology SCS requires minimal compressive force resistance. As the SCS retracts, it encounters the RTH and undocking complete sensors while in a kinematic configuration that has limited axial pulling force capability. To ensure the

Verify that this is the correct version before use

ability to engage the hooks, a maximum of 37.8 lbf (168.1 N) compressive force resistance is allowed across the interface. This means each side is allowed to have a maximum of 18.9 lbf (87.07 N) resistance [R.LIDS.5062].

4.1.3.7 Separation System Springs and Strikers

The NDS includes three separation springs recessed below the docking sealing surface, which can be remotely engaged for separation and reset to a recessed position for docking. This system provides force to overcome the seal stiction and energy to accelerate the vehicle away when the structural mate mechanism is released.

The umbilical resource connectors are nominally retracted prior to undocking. However, in the event of failure to retract the umbilicals, the separation system is capable of providing enough force to demate the umbilical resource connectors during separation.

The separation system and associated striker zones are shown in Figure 4-14. The striker zones are recessed below the HCS mating plane, as illustrated in Figure 4-15 and Figure 4-16.

Once charged against the striker on the mating docking interface, the separator has a minimum total extension stroke of 1.325 in. (33.7 mm) to be used for separation. The first part of the stroke is used for loosening the pressure seals and disengaging umbilical connectors, if any. The second part is used for vehicle separation dynamics. The three NDS separators together provide a total initial stored energy between 28.9 ft-lb (4.0 kgf-m) and 35 ft-lb (4.8 kgf-m) at zero interface separation [R.LIDS.1069]. The nominal force applied by a single charged separator to the striker surface is 155 to 160 lbf (689 to 712 N). However, during contigency cases, such as a limit switch failure, the maximum force can reach 200 lbf (890 N).

Figure 4-25: Single Separator Force Separation Curve shows the linear force separation curves of a single separator where the undocking separation distance indicates the separation between the two HCS mating planes. Multiply the force values by three to get the total system force acting on the vehicles at a given separation point. At a separation of 0.165 in. (4.2 mm), the separation system provides a minimum of 133.3 lbf (593 N) for each separator.

Nominally, it can be assumed that the vehicles have zero relative axial velocity as the hooks disengage. This occurs at a separation of approximately .22 in. (5.6 mm). Hence, a total energy between 21.2 ft-lb (2.9 kgf-m) and 26.3 ft-lb (3.6 kgf-m) TBR-88 is applied to vehicle separation under nominal conditions.

Note: In a contingency situation where the NDS umbilicals are not retracted first, the umbilical connectors resist separation until a separation of approximately 0.512 in. (13 mm) is achieved. Therefore, the energy available for vehicle separation is reduced in this scenario.

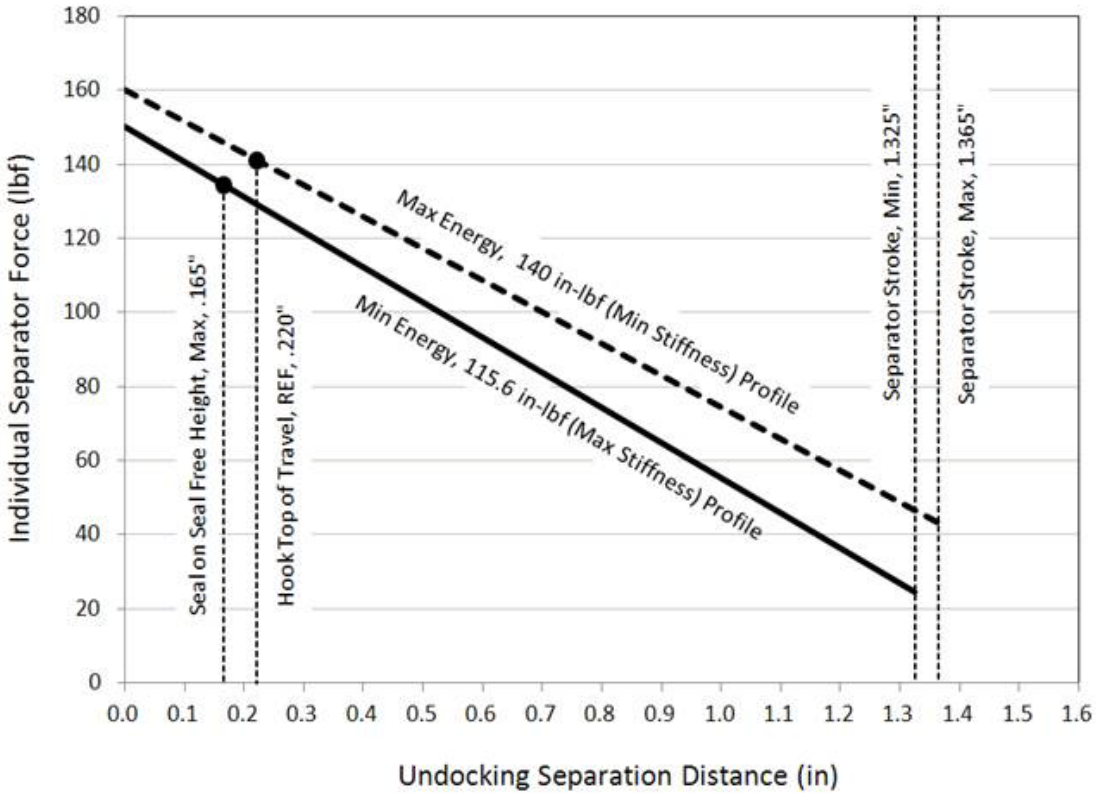

Figure 4-25: Single Separator Force Separation Curve (TBR-88)

4.1.4 NDS Interface Component Materials

At the docking interface, during docking operations and the post-docking phase, various types of events may occur, such as relative motion between mating components, contacts or impacts between mating parts, and/or preloading of mating structures. It is necessary to include the description of material characteristics so that the behavior of the components of interest can be predicted. Refer to Table 4-2: NDS I/F Component Materials for materials, surface coatings, and surface finishes of the interface components.

Table 4-2: NDS I/F Component Materials

Component	Material	Material Specification	Coating	Coating Specification	Finish (μ-in)
Guide Petal	7075-T7351 Al Aly	AMS-QQ-A-250/12	Hard Anodized	PRC-5006 Type III, Class 1	63
SCS Ring	7075-T7351 Al Aly	AMS 4078	Hard Anodized	PRC-5006 Type III, Class 1	63
Magnet	Note 1	Note 1	Note 1	Note 1	Note 1
Magnet Striker	Note 1	Note 1	Note 1	Note 1	Note 1
Tunnel (HCS Mating Plane)	2219 Al Aly	AMS 4144	Anodized	PRC-5006 Type II, Class 1	63

Component	Material	Material Specification	Coating	Coating Specification	Finish (µ-in)
Guide Pin	CRES 15-5 PH	AMS 5659 age hardened to H1025 per PRC-2001	Passivated	PRC-5002	16
Guide Pin Receptacle	CRES 15-5 PH	AMS 5659 age hardened to H1025 per PRC-2001	Lubricant, dry film	Everlube 620C	32
Hard Capture Hook	TITANIUM 6AL-4V	AMS 6930 COND STA or AMS 4965 COND STA	Lubricant, dry film	VITRO-LUBE NPI-1220C, cage code: 1P492	63

Note 1: Refer to SLZ29101641, Magnet with Dual Windings and Striker Plate Specification Control Drawing

4.1.5 Loads

The NDS is capable of performing docking operations under the following load conditions, as outlined in Table 4-3: SCS Maximum Docking Loads, Table 4-4: SCS Maximum Component Loads, Table 4-6: HCS Maximum Mated Loads, and Table 4-7: HCS Mated Load Sets. These loads are based on the IDSS IDD. NDS is capable of accepting these higher IDSS loads when in passive mode, though the NDS active SCS imparts lower loads during docking. Refer to Table 4-5: SCS Docking Loads for Active NDS.

4.1.5.1 Soft Capture Docking Loads

Table 4-3: SCS Maximum Docking Loads in Passive Mode

Tension	877 lbf	(3900 N)
Compression (Static)	787 lbf	(3500 N)
Compression (Dynamic, < 0.1 sec)	1461 lbf	(6500 N)
Shear	719 lbf	(3200 N)
Torsion	1106 lbf*ft	(1500 Nm)
Bending	2065 lbf*ft	(2800 Nm)

Table 4-4: SCS Maximum Component Loads in Passive Mode

Mechanical Latch Striker Tension	674 lbf		(3000 N)	
Magnetic Latch Striker Tension	517 lbf		(2300 N)	
Striker Compression	674 lbf		(3000 N)	
Petal Edge Length	0%	10%	60%	80%
Petal Contact Loads	787 lbf	517 lbf	517 lbf	225 lbf
	(3500 N)	(2300 N)	(2300 N)	(1000 N)

Verify that this is the correct version before use

Table 4-5: SCS Docking Loads for Active NDS

Axial	500 lbf	(2225 N)
Shear	300 lbf	(1335 N)
Torsion	950 lbf*ft	(1290 Nm)
Bending	950 lbf*ft	(1290 Nm)

Notes for Table 4-3, Table 4-4, and Table 4-5:

1. Loads shown in these tables are for reference only. JSC-65970, iLIDS Thermal and Induced Environments Specification is the governing document for applicable loads.
2. Values are design limit loads.
3. Values in Table 4-3 and Table 4-5 are defined at the center of the SCS mating plane. Refer to Figure 4-7 and Figure 4-8.
4. Values are 3σ maxima and are to be applied simultaneously, as provided in Table 4-3 and Table 4-5 such that the component values in Table 4-4 are not exceeded.
5. Shear and bending loads are vector sums in the plane of the SCS mating plane. Refer to Figure 4-7 and Figure 4-8.
6. The active SCS must meet all of its functional and performance requirements without exceeding loads defined in Table 4-3.
7. The passive soft capture interface, or active SCS in the passive mode, must meet all of its functional and performance requirements during and after exposure to loads defined in Table 4-3 and Table 4-4.
8. The petal contact load is applied to the edge of the petal or the outer face of the petal. The load can only be applied to the petal edge from the root of the petal to 80% of the petal length. The load can only be applied to the outer face from the root of the petal to 60% of the petal length from the base.

4.1.5.2 Hard Capture Mated Loads

Table 4-6: HCS Maximum Mated Loads

	Mated ISS	**Trans-Lunar**
Maximum Design Pressure	15.95 psi (1100 hPa)	0 psi (0 hPa)
Seal Closure Force	21,840 lbf (97,150 N)	21,840 lbf (97,150 N)
Compressive Axial Load	3979 lbf (17 700 N)	67443 lbf (300 000 N)
Tensile Axial Load	3979 lbf (17 700 N)	22481 lbf (100 000 N)
Shear Load	3754 lbf (16 700 N)	2248 lbf (10 000 N)
Torsion Moment	11063 ft*lbf (15 000 Nm)	11063 ft*lbf (15 000 Nm)
Bending Moment	50671 ft*lbf (68 700 Nm)	29502 ft*lbf (40 000 Nm)

Table 4-7: HCS Mated Load Sets

Load Set	Case 1	Case 2	Case 3	Case 4
Compressive Axial	1124 lbf (5000 N)	3979 lbf (17 700 N)	3080 lbf (13 700 N)	67443 lbf (300 000 N)
Tensile Axial	1124 lbf (5000 N)	3979 lbf (17 700 N)	3080 lbf (13 700 N)	22481 lbf (100 000 N)
Shear	1124 lbf (5 000 N)	3327 lbf (14 800 N)	3754 lbf (16 700 N)	2248 lbf (10 000 N)
Torsion	11063 ft*lbf (15 000 Nm)	11063 ft*lbf (15 000 Nm)	11063 ft*lbf (15 000 Nm)	11063 ft*lbf (15 000 Nm)
Bending	48163 ft*lbf (65 300 Nm)	28912 ft*lbf (39 200 Nm)	50671 ft*lbf (68 700 Nm)	29502 ft*lbf (40 000 Nm)

Notes for Table 4-6 and Table 4-7:

1. Loads shown in these tables are for reference only. JSC-65970, iLIDS Thermal and Induced Environments is the governing document for applicable loads [R.LIDS.0027].
2. Values are design limit loads.
3. Hard capture hook preload and tunnel stiffness will be such that when under external loading within limits, there remains metal-to-metal contact in the local vicinity of the hooks, as specified in SSP 30559, Structural Design and Verification Requirements [R.LIDS.0124].
4. Seal closure force to be included in all cases in Table 4-7.
   a. Cases 1 through 3 in Table 4-7 are pressurized mated cases.
   b. Case descriptions:
      - Case 1 – Attitude control by Orbiter-like, combined with crew activity.
      - Case 2 – Berthing of ISS segment while mated.
      - Case 3 – Orbiter-like translation with payload attached to NDS.
      - Case 4 – Trans-Lunar Injection (TLI)-like, modified from Constellation analysis. Not pressurized.

4.1.6 Leak Rate

The leak rates defined in this subsection assume a pressure internal to the NDS vestibule of 14.7 psia and an external vacuum pressure. The leak rate at the host interface is less than 0.0008 lbm dry air/day [R.LIDS.1114]. The leak rate at the NDS-to-NDS interface is less than 0.0025 lbm dry air/day [R.LIDS.1113]. The leak rate for feedthrough connectors internal to the NDS (excluding -302 and -305) is less than 0.0007 lbm dry air/day [R.LIDS.0041]. The NDS (-302 and -305) does not include feedthrough connectors.

When calculating the mated leak rate for a combined mated NDS stack, the NDS-to-NDS leak rate should only be accounted for once.

The following assumptions are made:

a. The leak rate at the NDS-to-NDS interface assumes 12 hooks fully engaged.
b. The leak rate for the feedthroughs internal to the NDS (excluding -302 and -305) vestibule is based on 14 class 77H hermetic feedthroughs (4X size 25 connectors, 10X size 13 connectors).

4.2 Electrical Interfaces

4.2.1 Electrical Bonding

The NDS establishes bond paths to mitigate electrical hazards on the integrated subsystem interfaces. The electrical bond meets the requirements established in NASA-STD-4003, Electrical Bonding for NASA Launch Vehicles, Spacecraft, Payloads, and Flight Equipment.

4.2.1.1 Electrical Bonding at Hard Capture (Class-R – Protection Against Radio Frequency Emission)

The NDS is protected against Radio Frequency (RF) emissions by maintaining a NASA-STD-4003 Class R bond at the “hard capture” NDS-to-NDS interface. There are three Class R bond paths between the mated systems. The first bond path is through the metal-to-metal contact on the seal interface between the two NDS mated systems. Refer to Figure 4-15. The second bond path is through the electrical umbilical connector backshell for the plug connector. The third path is through the electrical umbilical connector backshell for the receptacle connector. Refer to Figure 4-27: NDS Resource Transfer.

4.2.1.1.1 Electrical Bonding at Hard Capture (Class-H Protection Against Electrical Faults)

The NDS provides an electrical path for currents to flow in the structure between mated vehicles. There are three Class H bond paths between the mated systems. The first bond path is through the metal-to-metal contact on the seal interface between the two NDS mated systems. Refer to Figure 4-16. The second bond path is a #8 wire carried through the electrical umbilical plug connector. The third path is also a #8 wire carried through the electrical receptacle connector. These wires are provided as a resource between the mated vehicles. Termination of these lines should be negotiated between the two vehicles. Refer to Figure 4-26: NDS Electrical Bonding for an example of bonding between host vehicles.

Verify that this is the correct version before use

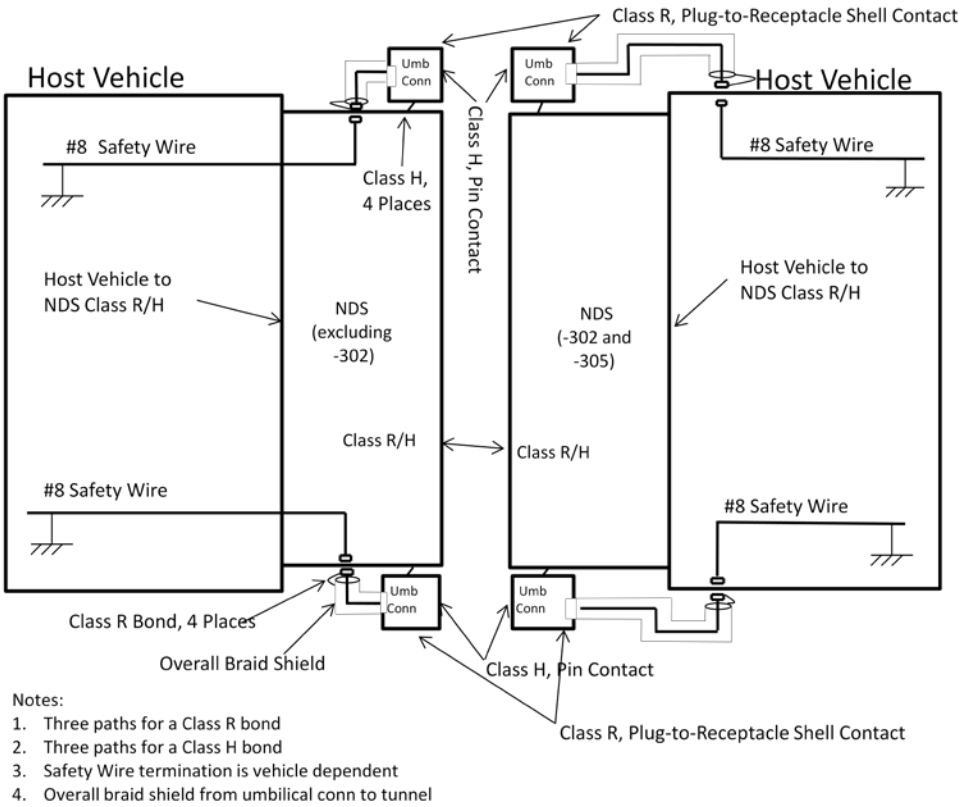

Figure 4-26: NDS Electrical Bonding

4.2.1.2 Electrical Bonding at Soft Capture (Class-S – Protection Against Electrostatic Discharge)

The NDS protects against static discharge by maintaining a NASA-STD-4003, Class-S bond through the SCS from initial contact to hard capture during docking operations. The bond path is from the electromagnet on the NDS in the active mode to the striker plate on the NDS in the passive mode.

4.3 Resource Transfer

The NDS umbilical connector interfaces transfer resources between the docked vehicles. These resources are power, data, and ground safety wire for the NDS configurations defined in this IDD. Future block upgrades may add water source and water return capability, fuel, tank pressurization, and oxidizer transfer capability. All umbilical connections are recessed below the docking mating plane during docking. The umbilical connectors are mechanized such that they can be driven to mate after docking hard capture occurs. Upon undocking, these connectors are nominally driven to the unmated state prior to unlatching the hooks. However, they can be separated passively by the energized separation system in the event of a failure to retract the umbilicals [R.LIDS.5021]. For the NDS-to-NDS umbilical interface location, refer to Figure 4-27: NDS Resource Transfer. For a detailed description of NDS umbilical implementation, refer to SLZ29101649, Umbilical EMA Specification Control Drawing.

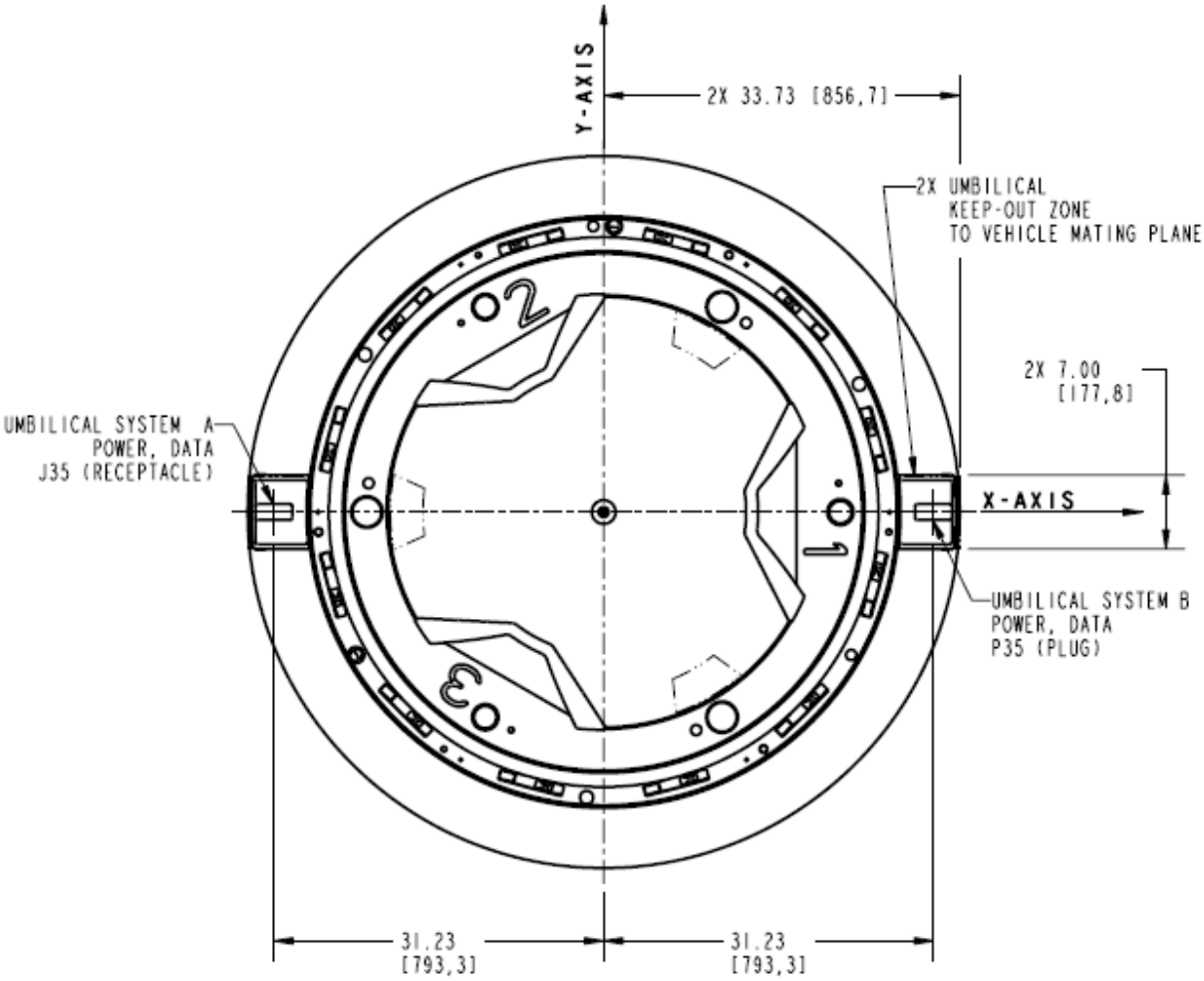

Figure 4-27: NDS Resource Transfer

4.3.1 Power Transfer and Command and Data Handling Transfer Umbilical

As shown in Figure 4-27, there are two umbilical connectors for power/data transfer. Each connector is a SSQ22680 Flight Releasable Attachment Mechanism (FRAM)-type connector that contains both power and data in the same connector shell. Separate power and data cable bundles are routed to the connector, then combined in the connector backshell. Maximum possible separation is maintained inside the connector. The connector body is the only shared volume where these two different Electromagnetic Compatibility (EMC) classes are combined. Refer to JSC-65842, Electromagnetic Environmental Effects (E3) Requirements Document, for the exception allowing two different EMC classes to reside in the same connector. Table 4-8: FRAM-Type Connector Pinouts [R.LIDS.5022] shows the pinouts of the FRAM-type umbilical connector.

4.3.1.1 Power Transfer

The NDS electrical power transfer between the two docked vehicles is not used by the NDS, but only transferred between the docked vehicles. Each connector has six #8 American Wire Gage (AWG) pins, but utilizes only five wires, a maximum of four feet long, for power transfer [R.LIDS.0030]. The pins on either side of the interface must be assigned to match the mating vehicle for the desired power transfer; this would allow transfer of two independent power circuits in a single connector.

4.3.1.2 Data Transfer

The NDS data transfer has separate pins for MIL-STD-1553B Single Bus (A and B) and 100 Base T Ethernet interface transfer [R.LIDS.0024]. These signals are not used by the NDS, but only transferred between the docked vehicles.

4.3.1.2.1 Ethernet Cable Specification

The NDS umbilical cabling for 100 Base-TX network segments will be constructed using Tensolite, Part Number (P/N) 22460/03213X-4(LD), shielded twisted pair Category 5e components in accordance with ANSI/TIA/EIA 568B.2 Annex N, Commercial Building Telecommunications Cabling Standard Part 2: Balanced Twisted-Pair Cabling Components with a maximum physical cable length not to exceed 4 ft [R.LIDS.0024.1].

4.3.1.2.2 MIL-STD-1553 Cable Specification

The NDS umbilical cabling for MIL-STD-1553 communication shall be constructed in accordance with SSQ 21655, Cable, Electrical, MIL-STD-1553 Databus, Space Quality, General Specification, with a maximum physical cable length not to exceed 4 ft [R.LIDS.0024.2].

4.3.1.2.3 Performance Data

Performance test data (e.g., voltage drop, frequency response, etc.) for power and data transfer is described in D684-14211-01, iLIDS FRAM Connector Test Evaluation.

Table 4-8: FRAM-Type Connector Pinouts [R.LIDS.5022]

P35 Umbilical Power+Data		
P/N SSQ22680-021 (Plug)		
P/N SSQ22680-10-004 (EMI Backshell)		
PIN #	**AWG**	**SIGNAL**
42	8	120V_SysB
43	8	120V_RTN_SysB
44	8	28V_SysB
45	8	28V_RTN_SysB
46	8	Ground Safety Wire_SysB
13	20	SysB_100BaseT_RX_P
27	20	SysB_100BaseT_RX_N
86	20	SysB_100BaseT_TX_P
72	20	SysB_100BaseT_TX_N
25	20	SysB_1553 CH 1A_P
38	20	SysB_1553 CH 1A_N
70	20	SysB_1553 CH 1B_P
57	20	SysB_1553 CH 1B_N
21	20	SysB_Umb_PowerData_Plug_LoopBack_P
34	20	SysB_Umb_PowerData_Plug_LoopBack_N
53	20	Short_to_pin_66
66	20	Short_to_pin_53

J35 Umbilical Power+Data		
P/N SSQ22680-022 (Receptacle)		
P/N SSQ22680-10-004 (EMI Backshell)		
PIN #	**AWG**	**SIGNAL**
42	8	120V_SysA
43	8	120V_RTN_SysA
44	8	28V_SysA
45	8	28V_RTN_SysA
46	8	Ground Safety Wire_SysA
13	20	SysA_100BaseT_RX_P
27	20	SysA_100BaseT_RX_N
86	20	SysA_100BaseT_TX_P
72	20	SysA_100BaseT_TX_N
25	20	SysA_1553 CH 1A_P
38	20	SysA_1553 CH 1A_N
70	20	SysA_1553 CH 1B_P
57	20	SysA_1553 CH 1B_N
21	20	Short_to_pin_34
34	20	Short_to_pin_21
53	20	SysA_Umb_PowerData_Receptacle_LoopBack_P
66	20	SysA_Umb_PowerData_Receptacle_LoopBack_N

Note:

1. System A will be crossed to system B when identically configured vehicles are mated.
2. The systems are identical; however, special procedures for systems operations may be required in this configuration.

4.3.2 Water Transfer

The NDS will perform water source and water transfer as a future block upgrade capability.

4.3.3 Fuel Transfer

The NDS will perform fuel transfer as a future block upgrade refueling capability.

4.3.4 Pressurant Transfer

The NDS will perform tank pressurization for fuel and oxidizer transfer as a future block upgrade capability.

4.3.5 Oxidizer Transfer

The NDS will perform oxidizer transfer as a future block upgrade refueling capability.

Verify that this is the correct version before use

5.0 NDS-TO-HOST VEHICLE INTERFACE

This section describes the interfaces between the NDS to a host vehicle. Specific implementation differences for various NDS configurations will be noted where applicable.

5.1 Interface Description

See Figure 5-1: NDS-to-Host Vehicle Interface Diagram.

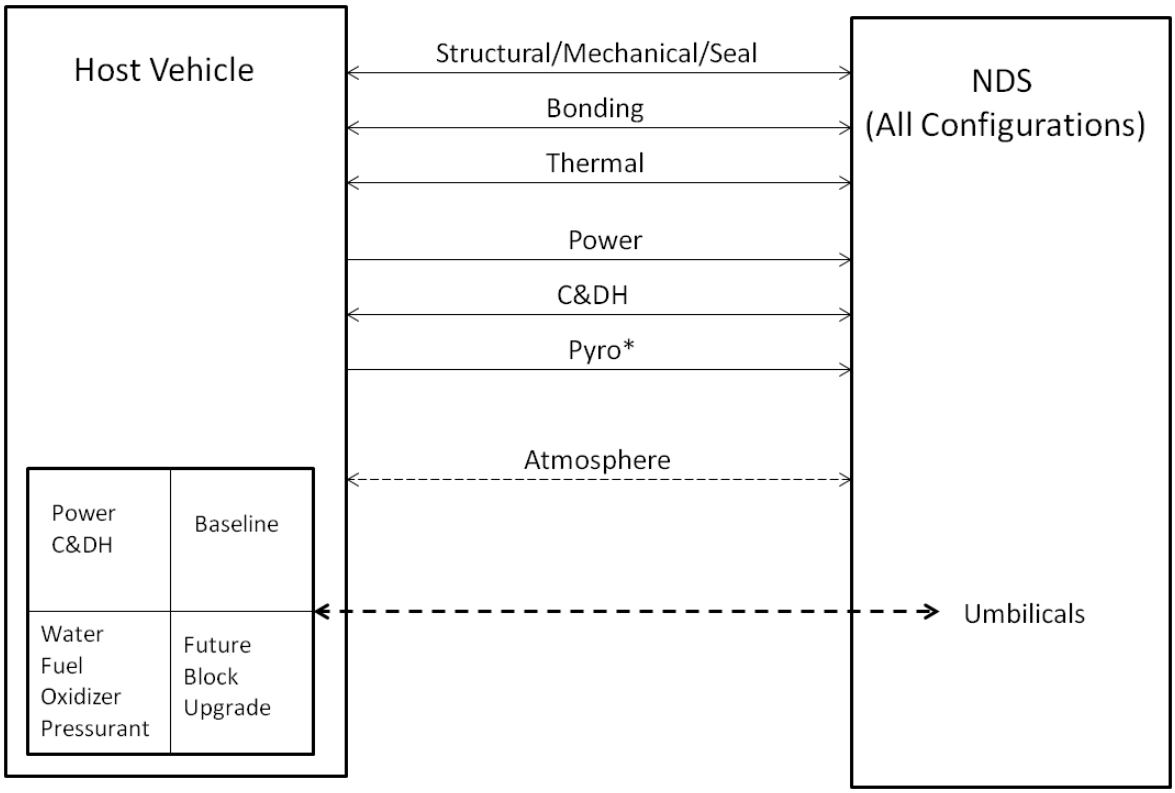

_____ Solid lines = functional interfaces
_ _ _ _ _ _ _ Dashed lines = pass-through resources vehicle-to-vehicle

Note: *Denotes pyro is not applicable for NDS (-302 or -304).

Figure 5-1: NDS-to-Host Vehicle Interface Diagram

5.2 Structural/Mechanical/Seal

The structural/mechanical/seal interface for the NDS resides at the plane of attachment between the host vehicle and the NDS. The NDS attaches directly to a bolt and seal interface flange on the host vehicle. The NDS attaches to the host vehicle with a circular arrangement of fasteners.

5.2.1 Mounting Interface

Refer to Figure 5-3: NDS-to-Host Vehicle Mounting Interface [R.LIDS.0001] for an overview of the NDS-to-host vehicle mounting interface.

Verify that this is the correct version before use

5.2.1.1 Mechanical Mounting and Seal Interface

The host vehicle provides a chemical conversion coated aluminum seal land which corresponds to seal locations defined in Figure 4-16. The NDS will provide the seals for this interface that are capable of limiting leakage, as specified in Section 4.1.6, Leak Rate.

5.2.1.2 NDS Installation and MMOD Shield Mounting

The NDS will be installed with MMOD sheet metal shielding removed for host vehicle fastener access. The NDS is installed on the host vehicle by fasteners provided by NDSP. Once the NDS is mounted to the host vehicle, the NDSP-provided (excluding -302 and -305) MMOD sheet metal shielding is installed on the NDS using NDSP-provided fasteners. In order to maintain NDS certification, the host must follow SKZ29101797, NDS Installation Procedure.

Note: For (-302 and -305), MMOD shielding is provided by the host vehicle. The NDS will provide the MMOD shield mounting interface defined in Figure 5-2: NDS (-302 and -305) Host-Provided MMOD Interface.

Verify that this is the correct version before use

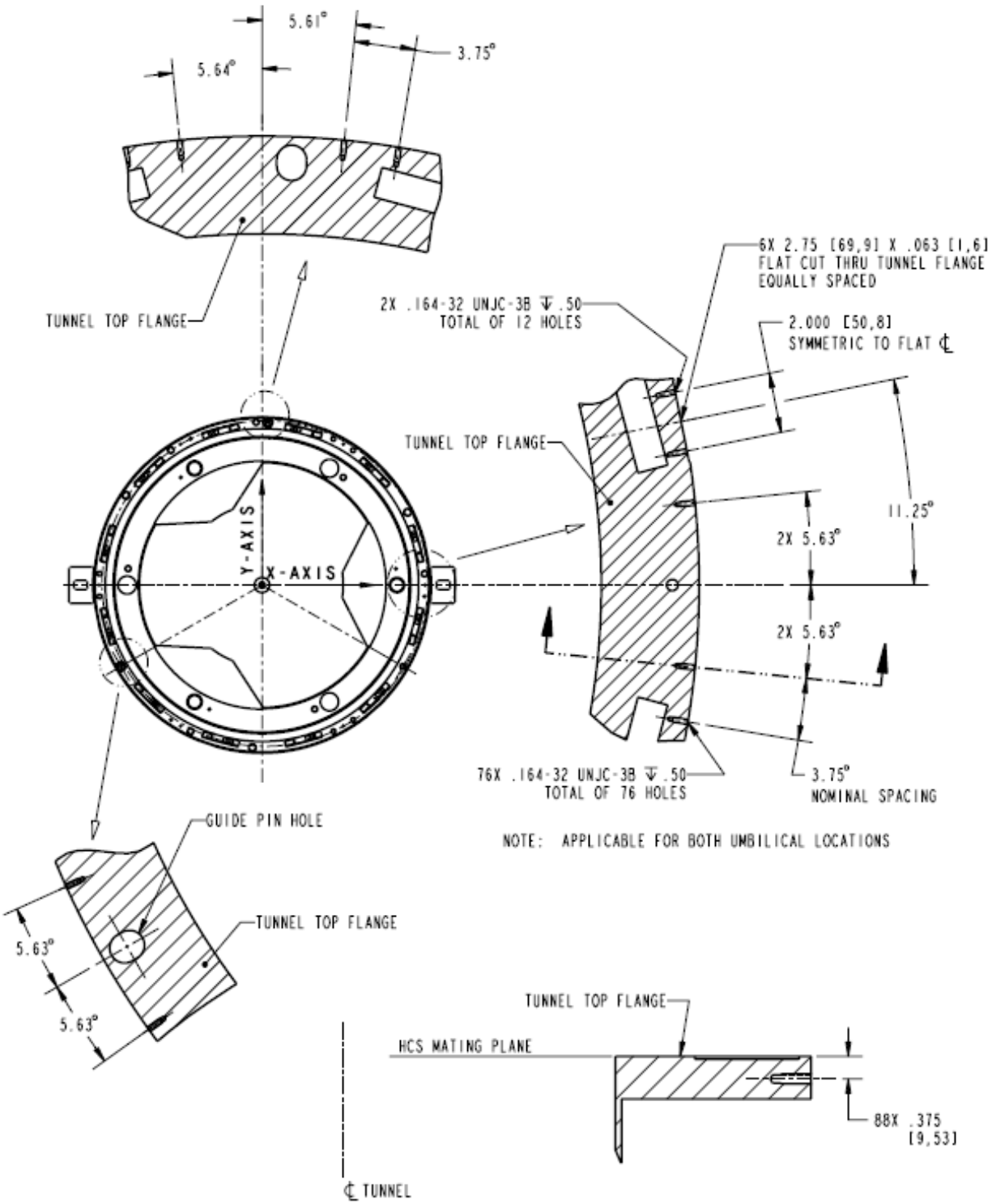

Section Through Mounting Hole

Figure 5-2: NDS (-302 and -305) Host-Provided MMOD Interface [R.LIDS.1111]

Verify that this is the correct version before use

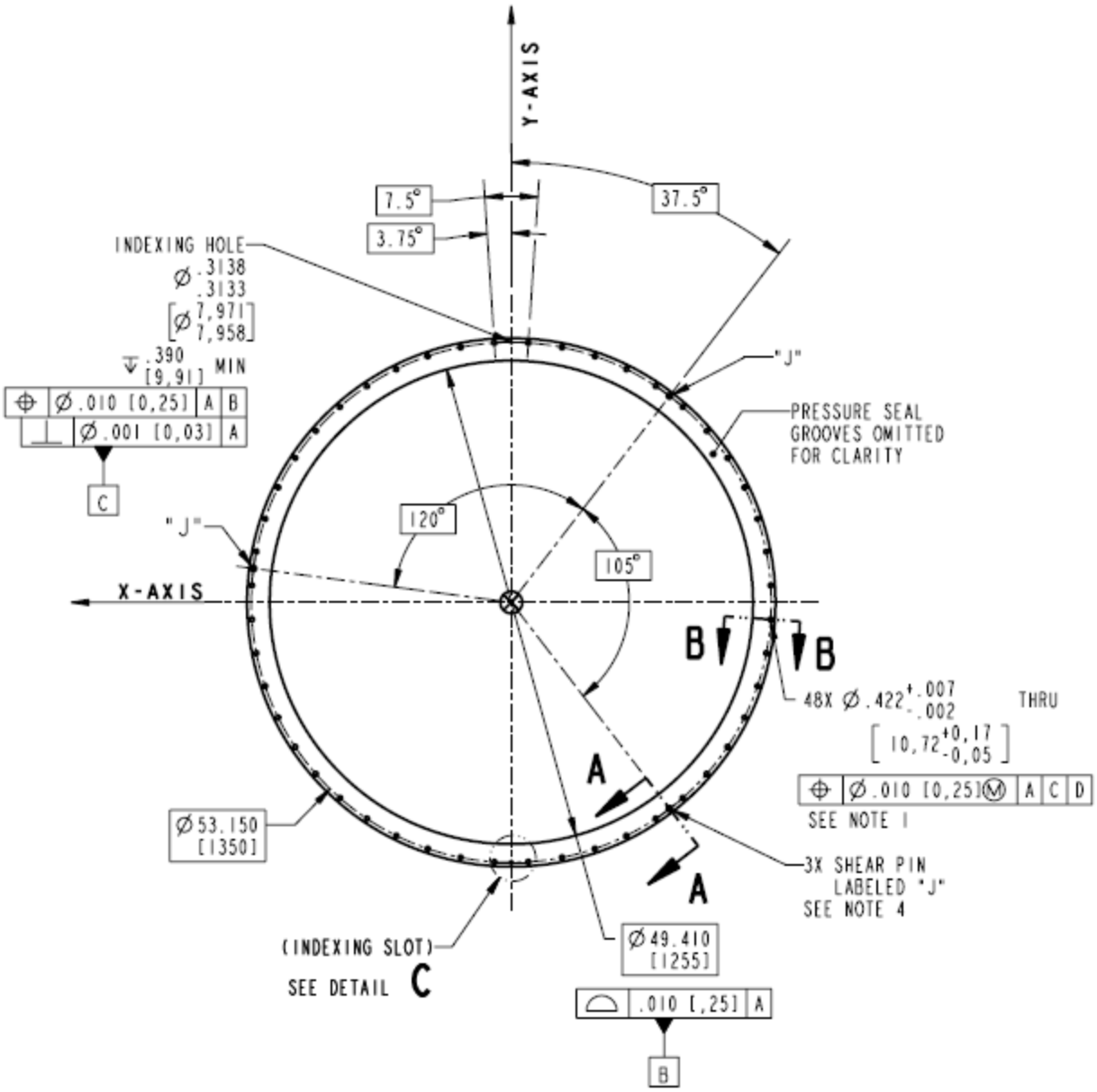

Note: View looking at NDS mounting flange from the host vehicle.

O-Ring grooves omitted for clarity

(Page 1 of 5)

Verify that this is the correct version before use

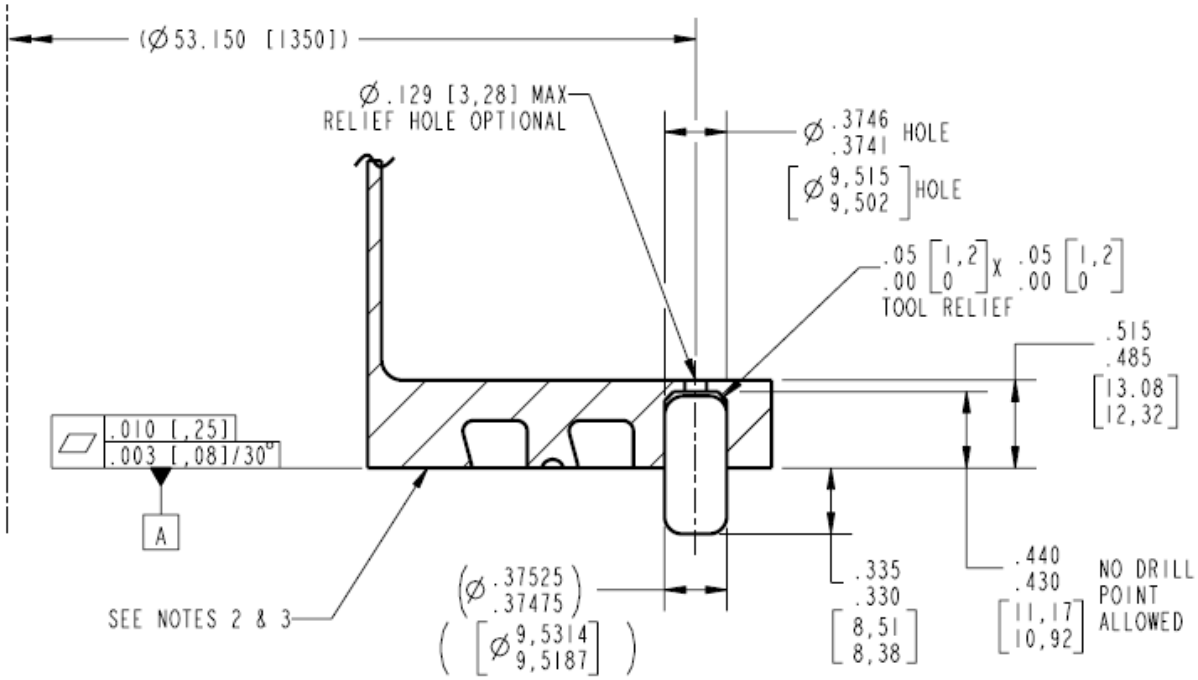

Section A-A

View Rotated to Horizontal

Note: NDSP provided standard pin per

AS9390 – Pin, Straight, Headless, Uns S66286, Standard

P/N: MS9390-680

(Page 2 of 5)

Verify that this is the correct version before use

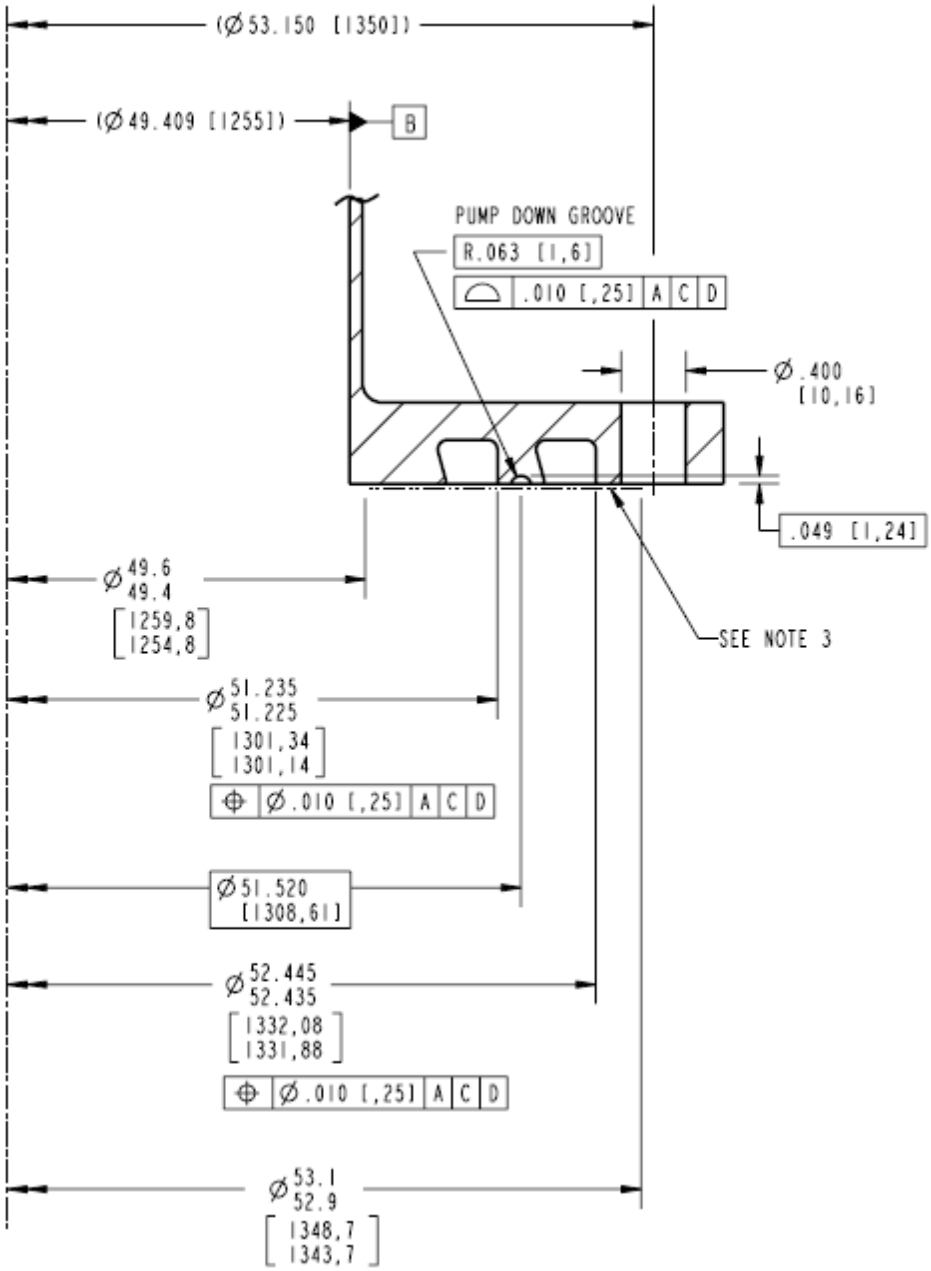

Section B-B

Rotated 3.75º CCW

(Page 3 of 5)

Verify that this is the correct version before use

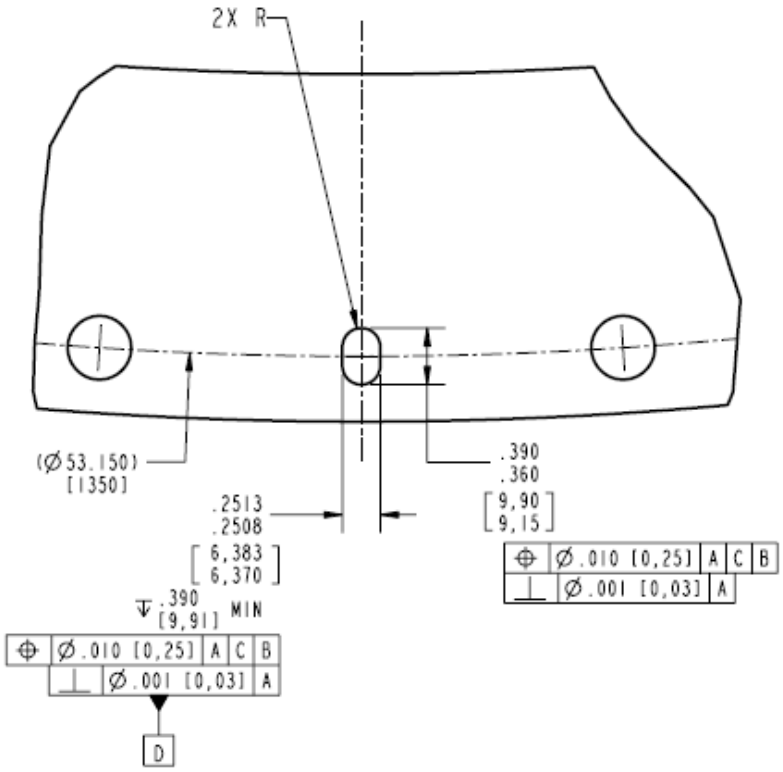

Detail C

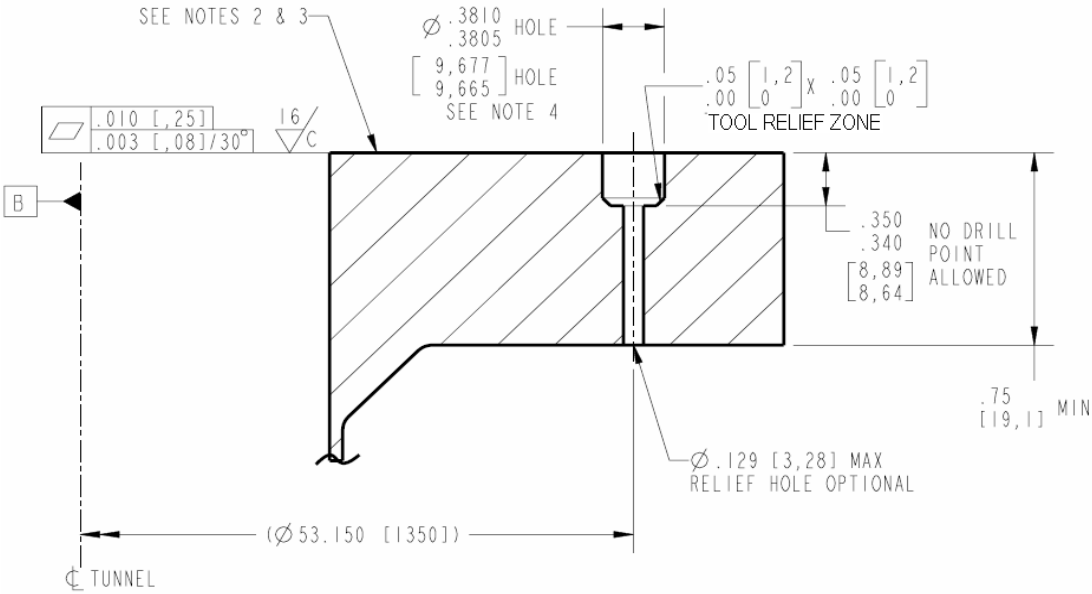

Host Vehicle Mounting Flange Detail (Shear Pin Hole)

(Page 4 of 5)

Verify that this is the correct version before use

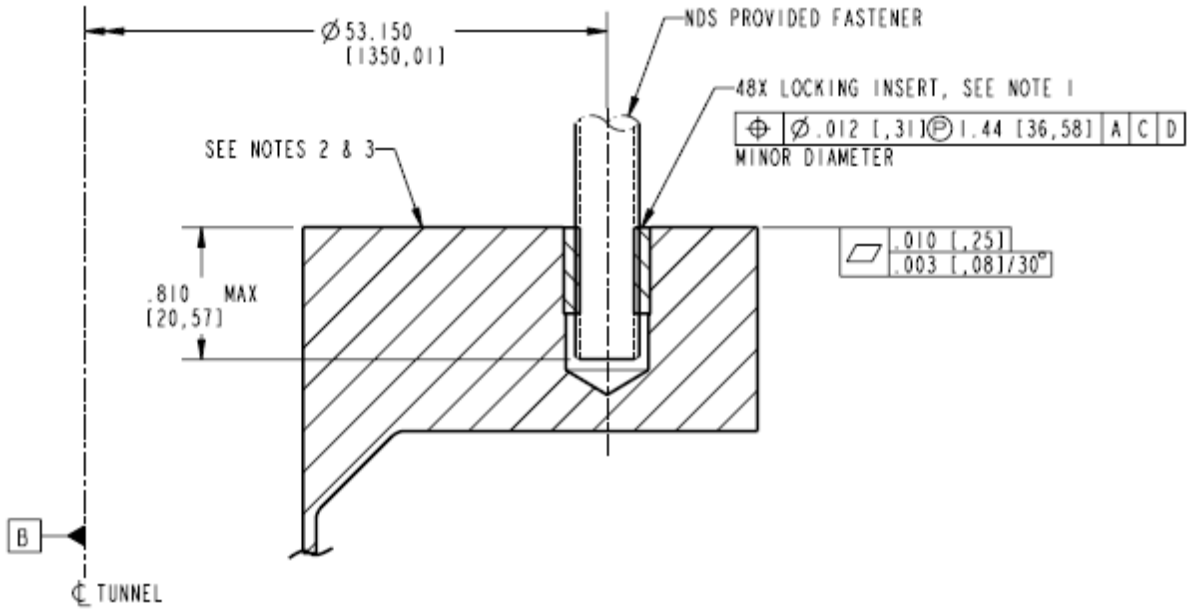

Host Vehicle Mounting Flange Insert Detail (Insert)

Example host-threaded hole detail.

Notes:

1. The NDS provides through holes and associated fasteners for host vehicle mounting. Host vehicle provides mating insert P/N KNML10 x 1.5T Keensert (vendor: Fairchild Fasteners). Blind installation shown; however, host may implement either through hole or bottom tap as desired.
2. Chemical conversion coat per MIL-DTL-5541, Type 1, Class 3.
3. Host vehicle to provide mating surface coating per Note 2. Host surface finish of 16 microinches circular lay. Host flatness must match NDS surface flatness per Figure 4-15 and Figure 4-16. The host surface finish requirements apply to the surfaces as shown in Section B-B (this figure, page 3 of 5).
4. Located with drill template tool (DRPSDZ29101974-5003 – Drill Template, NDS – Host Interface) provided by NASA using datums A, C, and D to achieve required fit of shear pins to mating holes. No drill point allowed; however, a relief in the corner of the hole of .05 max is allowed. Tool relief can be an irregular shape. If a vent hole or thru hole is used, the diameter shall be .129 max.

(Page 5 of 5)

Figure 5-3: NDS-to-Host Vehicle Mounting Interface [R.LIDS.0001]

5.2.1.3 NDS Electrical Boxes

NDS electrical boxes, with the exception of (-302 and -305), are mounted within the NDS tunnel. NDS (-302 and -305 only) electrical boxes are mounted within the host. The environments defined in JSC-65970, iLIDS Thermal and Induced Environments and JSC-64598, iLIDS Ionizing Radiation Control Plan allow for use outside of LEO (e.g., lunar). However, due to limitations on some electrical components, the initial certification will be only for LEO. Refer to Figure 5-4: NDS (-302 and -305) Remote

Electrical Boxes for mounting interfaces as well as Table 5-1: (-302 and -305) Box Mass Properties. The boxes for all configurations contain captive fasteners for host installation/replacement. Refer to SEZ29102058, Motor Box Assembly; SEZ29102059, Power Box Assembly; and SEZ29102060, Control Box Assembly for details defining the box configurations. In order for these boxes to be located remotely, the cables between the boxes and the tunnel must be extended. Furthermore, the cables from box-to-box must be lengthened to allow flexibility to fit into the various host-specific configurations. Appendix H: Cable Mass and Length Estimating Tool provides a method to estimate mass of various cable extension lengths for the (-302 and -305) configurations, assuming the wire gage of the extensions is the same gage as the wiring in the tunnel.

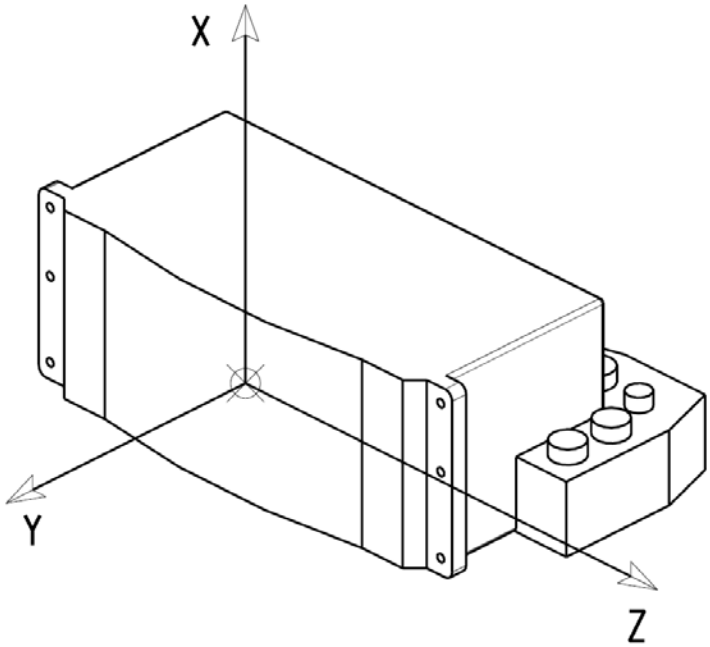

Typical Electrical Box Envelope

(Page 1 of 2)

Verify that this is the correct version before use

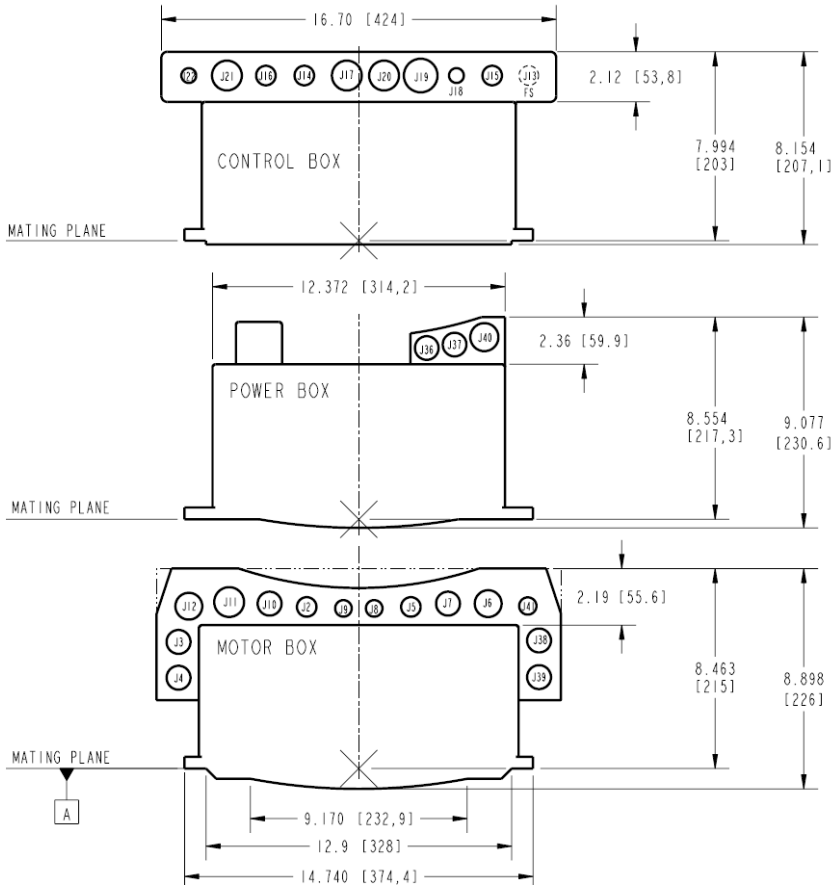

Note: The X indicates the origin of the box local coordinate system.

Electrical Box Envelope Dimensions Top View

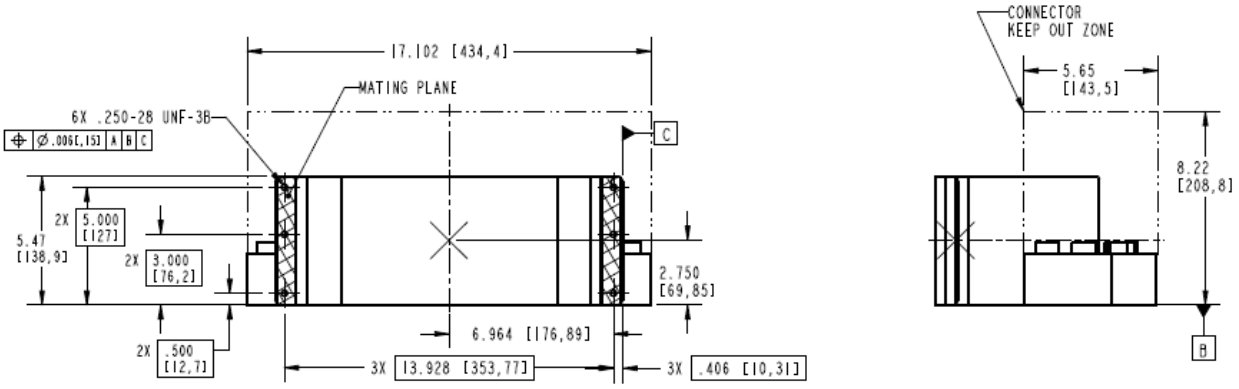

Note: The shaded area is the minimum contact for thermal conduction and electrical bonding on the host interface. The host surface must be chemical conversion coated per MIL-DTL-5541, Type 1, Class 3.

Electrical Box Envelope Dimensions Side View

(Page 2 of 2)

Figure 5-4: NDS (-302 and -305) Remote Electrical Boxes

Verify that this is the correct version before use

Table 5-1: (-302 and -305) Box Mass Properties

	Control Box	Motor Box	Power Box
Mass lb (kg)	15.757 (7.147)	17.026 (7.723)	22.677 (10.286)
Inertia(1) xx lb-in^2 (kg-mm^2)	4.955E+02 (1.45E+05)	4.521E+02 (1.323E+05)	4.903E+02 (1.435E+05)
Inertia(1) yy lb-in^2 (kg-mm^2)	4.422E+02 (1.294E+05)	4.010E+02 (1.174E+05)	4.338E+02 (1.269E+05)
Inertia(1) zz lb-in^2 (kg-mm^2)	1.515E+02 (4.436E+04)	1.484E+02 (4.344E+04)	1.597E+02 (4.674E+04)
Inertia(1) xy lb-in^2 (kg-mm^2)	-11.97 (-3.504E+03)	-9.693 (-2.837E+03)	-11.33 (-3.314E+03)
Inertia(1) xz lb-in^2 (kg-mm^2)	-0.6946 (-2.033E+02)	-0.4727 (-1.383E+02)	-17.32 (-5.070E+03)
Inertia(1) yz lb-in^2 (kg-mm^2)	3.075 (8.811E+02)	2.784 (8.147E+02)	5.953 (1.742E+03)
Center of Gravity X,Y,Z in. (mm) with respect to the indicated coordinate frame	X= -0.20919 -(5.31332) Y = -3.28929 -(83.54796) Z = 0.00124 (0.03154)	X= -0.33571 -(8.52695) Y= -3.48883 -(88.61616) Z= 0.09232 (2.34492)	X= -0.14271 -(3.62480) Y= -2.88599 -(73.30413) Z= 0.02742 (0.69641)

5.2.2 Thermal Interface

The thermal environments and analysis approach is documented in JSC-65970, iLIDS Thermal and Induced Environments.

5.2.2.1 NDS-to-Host Vehicle

The NDS utilizes heaters to condition/maintain temperatures above the minimum limits for each operating mode. Refer to Section 5.3.7, Heater Power and Control.

Warning: Unmated NDS systems in solar inertial attitudes with the NDS facing the sun are known to cause violations of operational and survival limits. In these attitude/ configuration conditions, time constraints will be imposed to protect the NDS. Refer to JSC-65978, iLIDS Thermal Data Book.

The allowable NDS-to-host vehicle interface acceptance temperature ranges for each operating condition, the thermal conductance, and the electrical box heat dissipation are defined in the following subsections.

In the event that the NDS loses one of its redundant heater systems, SCS extension time may be constrained in deep space cold environments. The time limitation is primarily based on the lubrication used in the Linear Actuators and SCS wire harnesses. Parameters that effect SCS extension time are Host Vehicle-to-NDS thermal interface, environment (view to space, approaching vehicle, etc.), and NDS component power dissipation (linear actuators in particular). A mission-specific thermal analysis is recommended to determined SCS extension limitations when using only one heater

system. Examples of minimum NDS/Host Vehicle thermal interface temperatures for black box analysis approach in deep space cold environments are included in JSC-65978, iLIDS Thermal Data Book.

5.2.2.1.1 Non-Operational Survival

The following applies when the docking system is unmated under non-operational conditions. Only heaters are active at this point.

-65 °F to +192 °F (-54 °C to +89 °C)

Minimum – The defined minimum interface temperature of -65 °F (-54 °C) is the minimum acceptance level temperature limit of the static seals (i.e., host interface seals).

Maximum – The defined maximum interface temperature of +192 °F (+89 °C) is the lowest maximum acceptance level temperature limit for the NDS hardware.

5.2.2.1.1.1 NDS (excluding -302 and -305) Non-Powered

The following applies when the NDS (excluding -302 and -305) is unmated under non-operational, non-powered conditions.

-47 °F to +192 °F (-44 °C to +89 °C)

5.2.2.1.1.2 NDS (-302 and -305, Excluding Electrical Boxes) Non-Powered

The following applies when the NDS (-302 and -305, excluding electrical boxes) is unmated under non-operational, non-powered conditions.

-65 °F to +192 °F (-54 °C to +89 °C)

5.2.2.1.1.3 NDS Electrical Boxes Non-Powered

The following applies when the NDS is unmated under non-operational, non-powered conditions.

-47 °F to +192 °F (-44 °C to +89 °C)

5.2.2.1.2 Operational

The following applies when the docking system is preparing to dock, up through hard mate, but prior to pressurization.

-38 °F to +122 °F (-39 °C to +50 °C)

Minimum – The defined minimum interface temperature of -38 °F (-39 °C) is the minimum acceptance temperature limits of the static seals.

Maximum – The maximum temperature of +122 °F (+50 °C) is the maximum acceptance level limit of the static seals. It is also the maximum allowable tunnel temperature, which allows electronics to perform the docking power profile without violating their maximum temperature limits.

5.2.2.1.2.1 NDS Electrical Boxes Operational

The operational temperature range for the NDS electrical boxes is:

-20 °F to +138 °F (-29 °C to +59 °C)

5.2.2.1.3 Mated and Pressurized

This subsection defines steady-state mated and pressurized limits for the NDS after hard mate and pressurization.

5.2.2.1.3.1 Uncrewed Vehicles

The following is the steady-state temperature after hard mate and pressurization for uncrewed vehicles.

+25 °F to +122 °F (-4 °C to +50 °C)

Minimum – The minimum temperature of +25 °F (-4 °C) is the minimum known dew point for uncrewed pressurized vehicles. However, this minimum interface temperature will be defined by the combined host and visiting vehicle dew point temperature. The known dew point temperature range for uncrewed vehicles is +25 °F to +75 °F (-4 °C to +23.9 °C). The NDS heaters will be capable of conditioning NDS above the +75 °F (+23.9 °C) maximum dew point temperature.

Maximum – The maximum temperature of +122 °F (+50 °C) is defined by the maximum acceptance level seal operational temperature limit.

5.2.2.1.3.2 Crewed Vehicles

The following is the steady-state temperature range after hard mate and pressurization for crewed vehicles.

+39 °F to +113 °F (+4 °C to +45 °C)

Minimum – The minimum temperature of +39 °F (+4 °C) is the minimum bare-handed touch temperature for continuous contact. However, this interface temperature can be defined by the dew point temperature. The general defined dew point temperature range for crewed vehicles is +40 °F to +60 °F (+4.4 °C to +15.6 °C). Therefore, the minimum interface temperature could be as high as +60 °F (+15.6 °C) depending on the host and visiting vehicles combined dew point temperature. The NDS heaters shall be capable of conditioning NDS above the +60 °F (15.6 °C) maximum dew point temperature.

Maximum – The maximum temperature of +113 °F (+45 °C) is the minimum bare-handed touch temperature for continuous contact.

5.2.2.1.3.3 Mated and Pressurized Steady-State Time Period

The time to reach steady-state temperature is dependent on the initial docking system temperature. Starting at low docking system temperatures, the worst case time to achieve this steady-state temperature could take up to 8 hours, using both heater systems, and 13 hours for a single heater system. Analysis has shown that after hard mating, it can take as long as 8 hours in a cold environment for an NDS to warm up to the minimum dew point temperatures when starting from the minimum allowable

operating temperatures. This warm up profile is shown in Figure 5-5: NDS Post Hard Mate Warm Up Profile. This does not restrict pressurization or hatch opening, but it would result in condensation within the vestibule during this transition period. In addition, if hatch opening is required prior to the system achieving safe touch temperatures, the crew may be required to use Personal Protective Equipment (PPE). Refer to Nonconformance Compliance Report NCR-ISS-iLIDS-002 allowing early hatch opening.

For typical ISS dockings, assuming Torque Equilibrium Attitude (TEA), it is expected that the initial docking system temperature will be higher, as indicated in Figure 5-5.

The length of time could be reduced by changing the NDS heaters to the mated/pressurized set points prior to hard mate. This will heat the NDS above minimum operating temperatures. In this operation, the temperatures achieved prior to mating are dependent on the environment, heater power, and the time duration between the set point change and hard mating.

Starting at high docking system temperatures, the worst case time to achieve the +113 °F (+45 °C) IVA touch temperature could take up to 40 minutes. This cool down profile is shown in Figure 5-6: NDS Post Hard Mate Cool Down Profile.

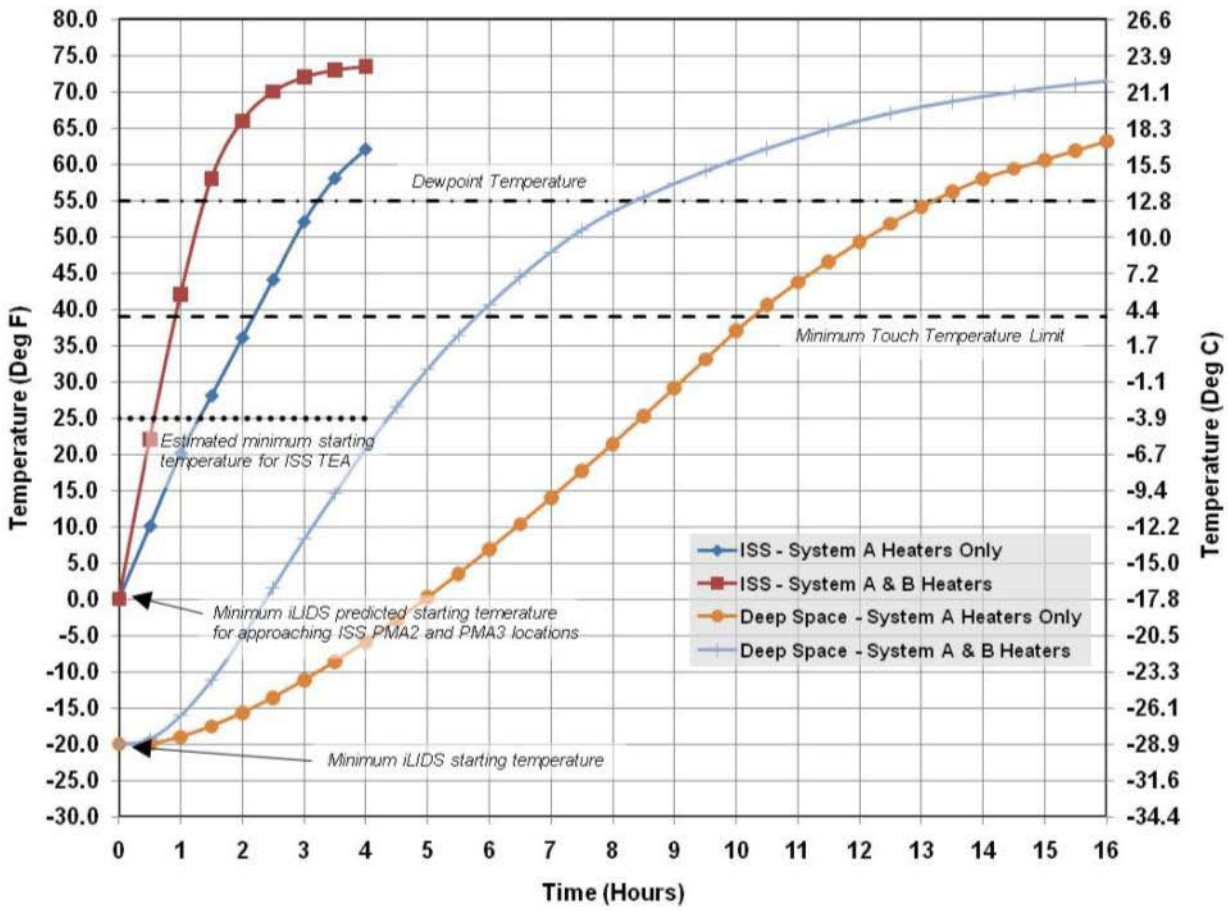

Figure 5-5: NDS Post Hard Mate Warm Up Profile

Verify that this is the correct version before use

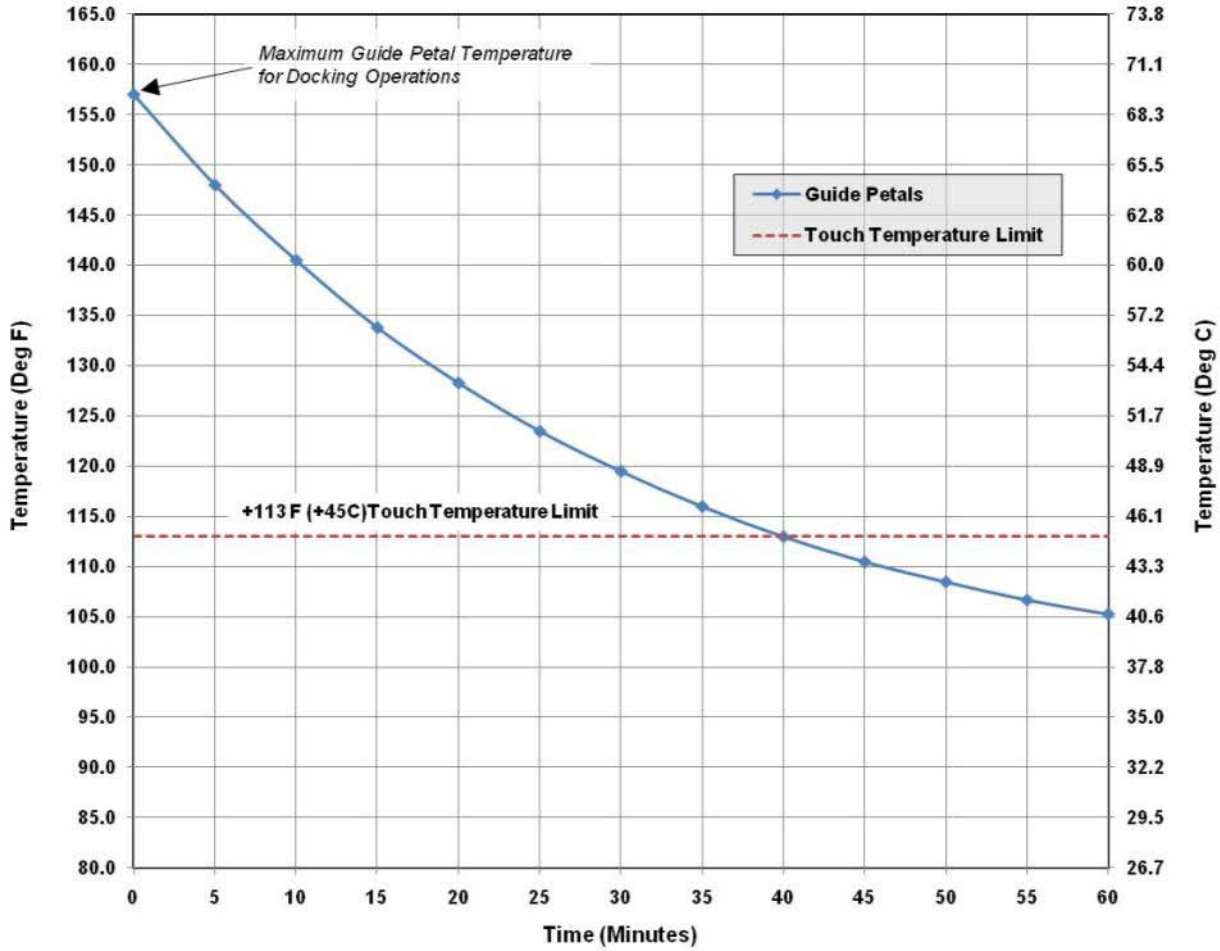

Figure 5-6: NDS Post Hard Mate Cool Down Profile

5.2.2.1.4 Thermal Conductance

The thermal contact conductance across the NDS-to-host vehicle interface is defined as ranging from 15 Btu/hr-ft^2-°F to 50 Btu/hr-ft^2-°F for the metal-to-metal contact area [R.LIDS.5057].

For (-302 and -305) electrical boxes, the thermal contact conductance from the electrical boxes to the host-provided mounting interface ranging from 15 Btu/hr-ft^2-°F to 50 Btu/hr-ft^2-°F at each of the two mounting interfaces per box for the metal-to-metal contact area shown in Figure 5-4. The host mounting interface cannot exceed 122 °F (50 °C).

5.2.2.1.5 NDS Remote-Mounted Electrical Boxes Power Dissipation (-302 and -305)

Table 5-2: NDS Remote-Mounted Electrical Boxes Power Dissipation (-302 and -305) is provided to allow host vehicles to size environmental systems for remote mounted boxes [-302 (120 VDC) and -305 (28 VDC)]. Since the 120 VDC and 28 VDC power supplies have the same output power, the power dissipation will be similar between the two input voltages. The primary system is the set of boxes (A or B) that is actively

Verify that this is the correct version before use

controlling the system. The secondary system is the set of boxes (A or B) on standby in the event of failure in the primary system. When the box heaters are operating, the boxes generate additional power dissipation per system, depending on thermal environment. Note: The heaters may be operating independent of NDS operation in order to keep the NDS within the survival temperature range. When the NDS is within the survival temperature range, not requiring heater operation, the heater system control must still be active in the event that heaters are required.

Table 5-2: NDS Remote-Mounted Electrical Boxes Power Dissipation (-302 and -305)

Box Mode	Power Dissipation Primary System(W)	Power Dissipation Secondary System (W)	Time
Docking Operation	66	51	20 minutes
Quiescent boxes (Health and status only, no heater operation)	39	39	Host dependent based on planned Health and Status Query rate
Heater system is powered but not heater elements	20	20	Host and environment dependent
Heaters Operational – Max Heating load (400W)	58	20	Host and environment dependent

5.2.2.2 NDS (-302 and -305 Only)

The Multi-Layer Insulation (MLI) thermal cover and MMOD external shielding for (-302 and -305) is provided by the host.

5.3 NDS-to-Host Vehicle Electrical and Signal Interface

This subsection describes the electrical and signal interfaces between the NDS and the host vehicle. As indicated in Figure 5-7: NDS-to-Host Vehicle Electrical Interface, there are two NDS-to-NDS electrical umbilical connectors allowing redundant electrical signals. Both power and Command and Data Handling (C&DH) are routed through a single connector. However, after exiting the backshell of the NDS-to-NDS umbilical connector, the power and C&DH are separated and run to individual connectors at the host side. The NDS electrical connections are located as shown in Figure 5-15: NDS (excluding -302 and -305)-to-Host Vehicle Electrical Interface. The electrical interface between the NDS and the host vehicle has the functions indicated in Figure 5-7: NDS-to-Host Vehicle Electrical Interface.

Verify that this is the correct version before use

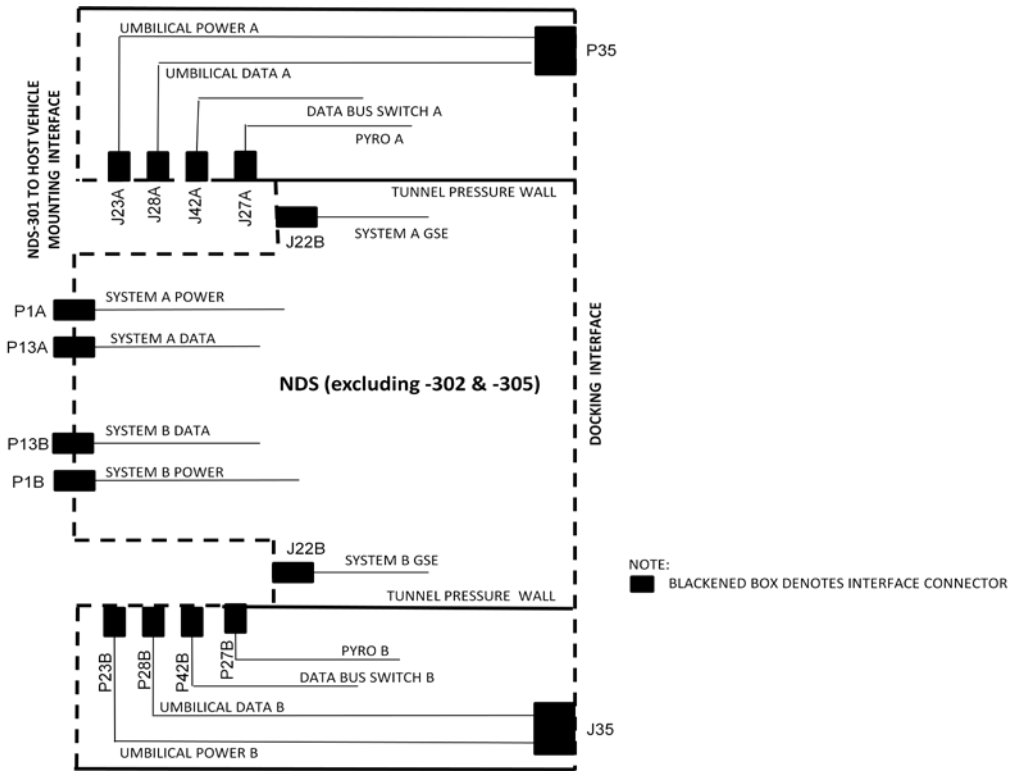

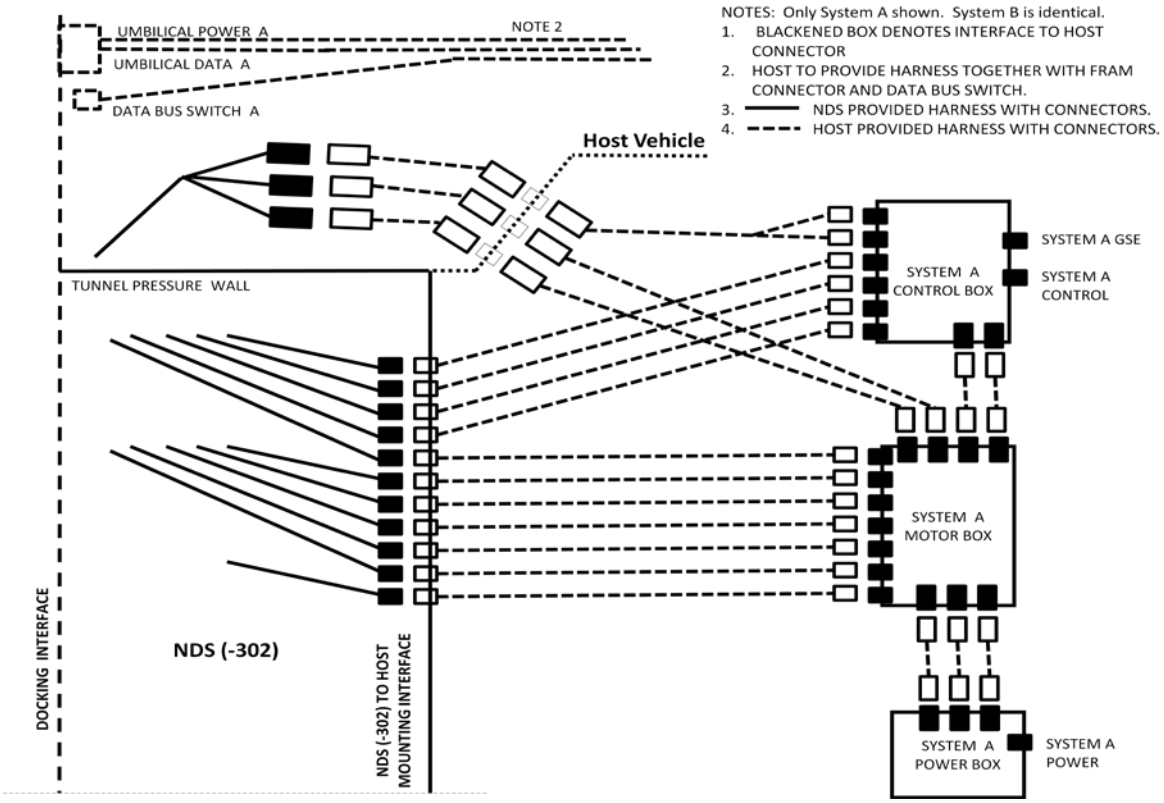

Note: NDS (-302) interface is schematic representation only; not physical location.

(Page 1 of 2)

Verify that this is the correct version before use

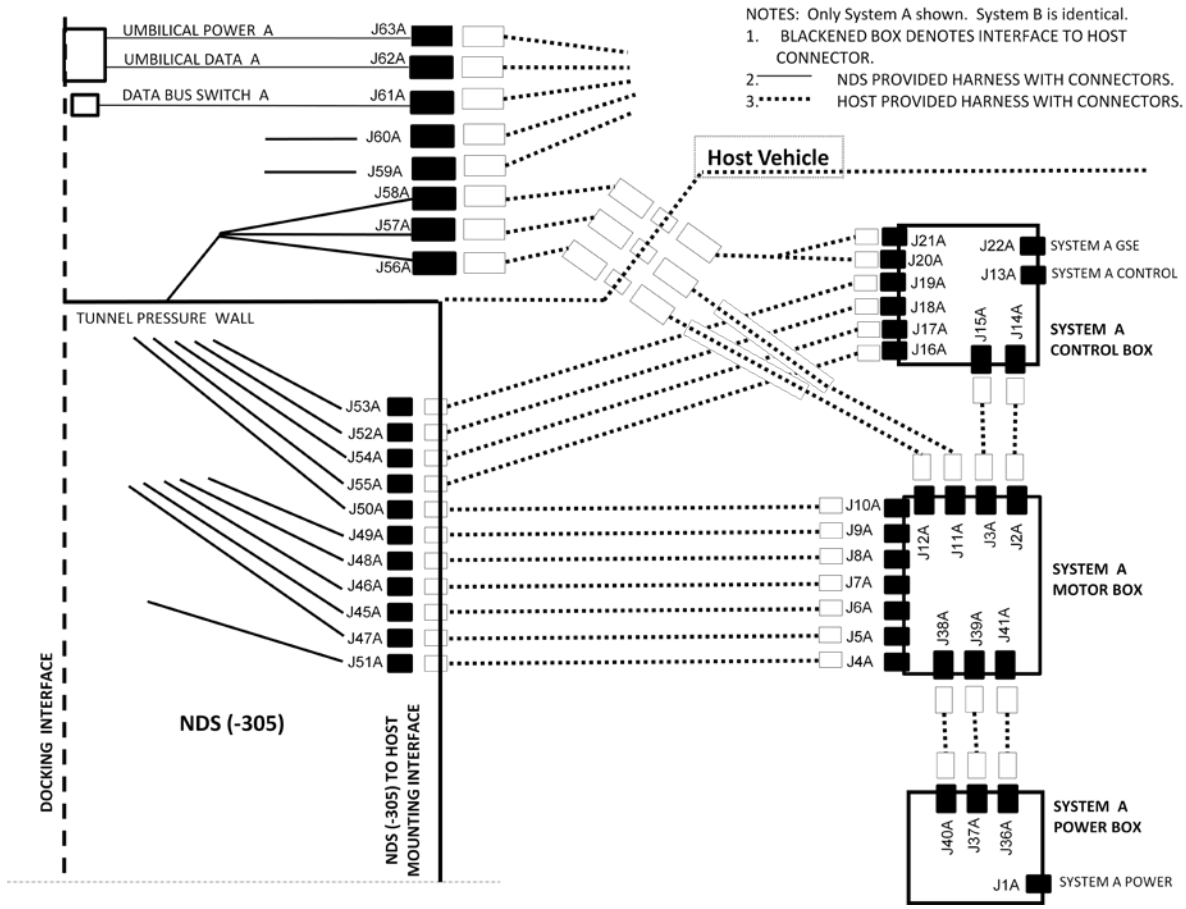

Note: NDS (-305) interface is schematic representation only; not physical location. This schematic defines the NDS connector to remote mounted box connectors. [R.LIDS.5030]. Refer to Appendix F for pinouts.

(Page 2 of 2)

Figure 5-7: NDS-to-Host Vehicle Electrical Interface

5.3.1 Umbilical Power Transfer Interface-to-Host Vehicle (excluding -302)

The vehicle interface has a separate connector for power and data, unlike the NDS umbilical interface, which combines power and data. Refer to NDS power transfer capability defined in Section 4.3. The pinouts are shown in Appendix F [R.LIDS.5037].

5.3.2 Umbilical Data Transfer Interface-to-the-Host Vehicle (excluding-302)

Refer to NDS data transfer capability defined in Section 4.3. Unlike the NDS umbilical interface, which combines power and data, the vehicle interface has a separate connector for data. Refer to Figure 5-15. The pinouts are shown in Appendix F.

5.3.2.1 Umbilical Connector Mated Indication (excluding -302 and -305)

The data connector interface to the host provides indication that pins have engaged between the NDS-to-NDS umbilical connectors. Each connector has pins that are electrically shorted together; when the connectors mate, this short can be sensed by the docking vehicles. This is an indication that the connectors are seated and the pins have

engaged, which signifies that power and data can be exchanged. Figure 5-15: NDS (excluding -302 and -305)-to-Host Vehicle Electrical Interface shows the umbilical locations to the host vehicle.

5.3.3 Umbilical Connector Data Bus Termination Wires Interface-to-the-Host Vehicle (excluding -302)

A switch is provided to allow the MIL-STD-1553 data passing through the umbilical resource to be terminated, thus enabling the bus impedance to be maintained. The termination switch operates when the mating umbilicals are in contact. The switch wires are routed to a connector at the interface to the host vehicle. The pinouts for this connector are shown in Appendix F. The NDS does not connect this switch to the data bus; it is the host vehicle's responsibility to wire from this switch connector to the MIL-STD-1553 data bus. This switch is provided to the host vehicle as a resource, and the use or non-use of the switch is the responsibility of the host vehicle.

5.3.3.1 NDS (-302) Umbilical Connector Data Bus Termination

The NDS -302 umbilical connector data bus termination is a responsibility maintained by the host vehicle. The host must provide the switch, cable, and connector. NDS (-302) only provides the mechanical interface for the data bus termination switch. Refer to SLZ29101649, Umbilical EMA Specification Control Drawing for interface details to the umbilical mechanism including switch P/N.

5.3.4 Pyrotechnic Interface NDS (-301, -303, and -305)

The NDS (-301, -303, and -305) contains pyrotechnics in both the active and passive hooks at the hard mate interface [R.LIDS.1115]. Therefore, if the NDS active hooks fail to unlatch, the host may fire the pyrotechnics releasing either or both active and passive gangs or hooks. The 24 hooks will be fired in gangs, six at a time. A single gang of six is every other hook. The total time required for hook release within one gang of six hooks is less than 150 ms [R.LIDS.1115]. The control and inhibits for this firing are provided by the host vehicle. The host provides three inhibits to inadvertent firing. There are four NASA Standard Initiators (NSIs) in the NDS (one per gang of six hooks, active and passive). For each NSI, the host must provide a pyrotechnic controller channel [e.g., Pyrotechnic Event Controller (PEC) or Pyrotechnic Initiator Controller (PIC)]. Pyrotechnics would be used as contingency measures in the event of two failures to undock. Therefore, no redundancy is required in the NSIs or pyrotechnic controller channel. All pyrotechnics used in this system follow the requirements of JSC-62809, Human Rated Spacecraft Pyrotechnic Specification [R.LIDS.1103] (Sections 3.2, 3.6.2, 3.6.3, 3.6.8, 3.6.20, 7.3 – 7.3.4, 8.1 – 8.3.6, 8.4.2 – 8.4.5, 8.4.7 – 8.4.10, and 8.5), e.g., requirements for pyrotechnic system fault tolerance, EMI susceptibility, processing and handling.

In the event of pyrotechnic activation, potential Foreign Object Debris (FOD) is generated. The FOD size is TBD-70. The docking system vestibule must be depressurized prior to pyrotechnic separation of the host vehicles.

The NDS induces pyroshock at the NDS-to-NDS and at the host vehicle per Figure 5-8: Maximum Pyroshock Levels at NDS/NDS and NDS/Host I/F for Contingency

Pyrotechnic NDS Separation. Refer to Figure 5-15: NDS (excluding -302 and -305)-to-Host Vehicle Electrical Interface. The NDS provides connectors for host initiation of the pyrotechnics. The pinouts are shown in Appendix F. The host may decide whether to fire all 12 hooks (all active or all passive) simultaneously or gangs of 6. The shock value in Figure 5-8 is for 12 hooks fired simultaneously.

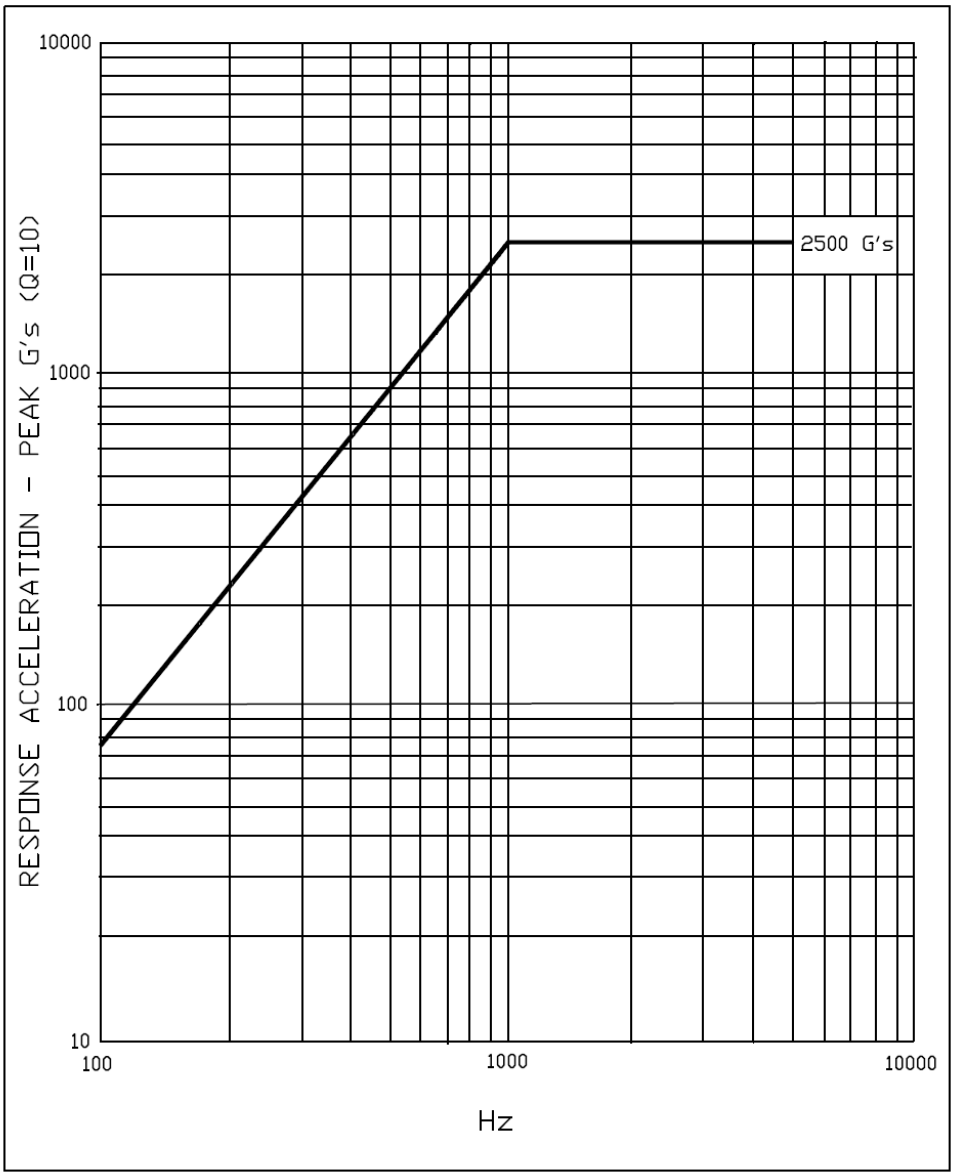

Figure 5-8: Maximum Pyroshock Levels at NDS/NDS and NDS/Host I/F for Contingency Pyrotechnic NDS Separation

5.3.4.1 Pyrotechnic Interface NDS (-302 and -304)

The NDS (-302 and -304) does not contain pyrotechnics for hook release; therefore, a pyrotechnic electrical interface is not present on the NDS (-302 and -304). The pyro bolt in the active and passive hooks is replaced with an inert bolt. For example, using pyrotechnics on the NDS (-302) for the ISS docking system would foul the port such that

Verify that this is the correct version before use

it could no longer be used for docking. The ISS will rely on the visiting vehicle undocking redundancy and pyrotechnics to allow the visiting vehicle to depart. In order to reduce mass, the NDS (-304) does not contain pyrotechnics.

5.3.5 Electrical Power from Host Vehicle-to-NDS

The NDS operates with power from the host vehicle that meets JSC-64599, iLIDS Power Quality Description Document [R.LIDS.0003]. All NDS configurations (excluding -303 and -305) operate on 120 Vdc. The NDS (-303 and -305) operates on 28 Vdc power from the host vehicle. There are two redundant power system feeds required: one for system A and one for system B. Both system A and system B will draw power during the docking/undocking event per JSC-64599.

5.3.6 Communications Between the Host Vehicle and the NDS

Each NDS system communicates with its host vehicle via a serial interface. The NDS supports two types of serial interfaces: TIA-422-B and MIL-STD-1553B. The host vehicle selects which interface type to use by way of configuring a jumper in the NDS host communications connector. Refer to Appendix F for the pinout and installation of the jumper for this connector.

The NDS requires two redundant communication interfaces: one for system A and one for system B. Both system A and system B will communicate with the host vehicle. All communication (e.g., commands, data, status) for operating the NDS are sent through the selected serial interfaces.

The TIA-422-B serial data channel is described in Figure 5-9: Block Diagram TIA-422-B Serial Communications Host Vehicle-to-NDS. The MIL-STD-1553B serial communications port is described in Figure 5-10: Block Diagram MIL-STD-1553B Serial Communications Host Vehicle-to-NDS.

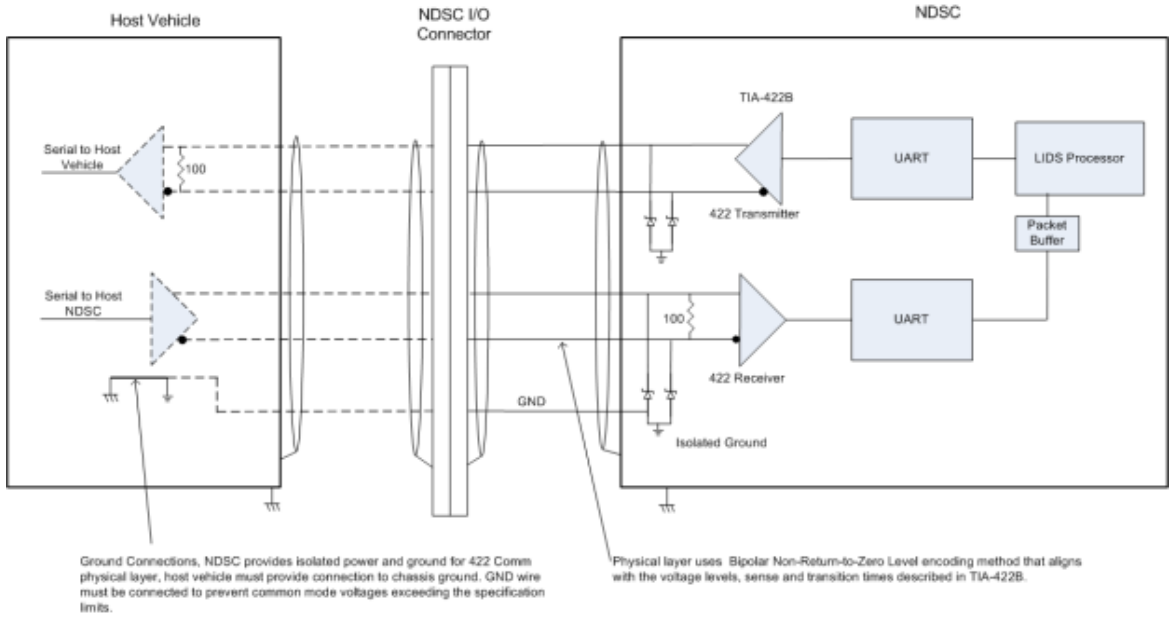

Figure 5-9: Block Diagram TIA-422-B Serial Communications Host Vehicle-to-NDS

Verify that this is the correct version before use

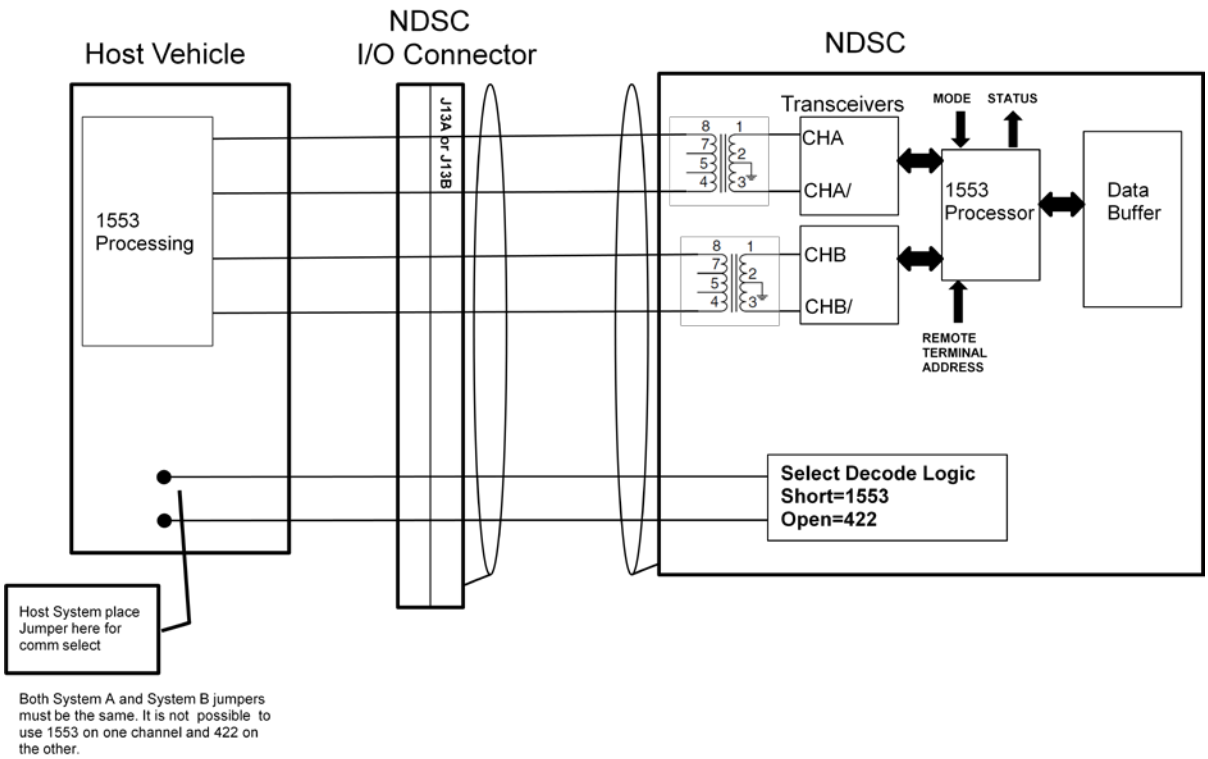

Figure 5-10: Block Diagram MIL-STD-1553B Serial Communications Host Vehicle-to-NDS

5.3.6.1 C&DH Interface, Physical Layer Safe Operating Area

The TIA-422-B C&DH interface is protected against lightning transients up to the limits shown in Figure 5-11: Safe Operation Area for TIA-422-B C&DH Serial Port. These curves were computed for the Transient Voltage Suppressor (TVS) using the ARP5412 lightning current impulse waveforms. Open circuit voltage and short circuit current refer to the circuit parameters at the NDS host connector.

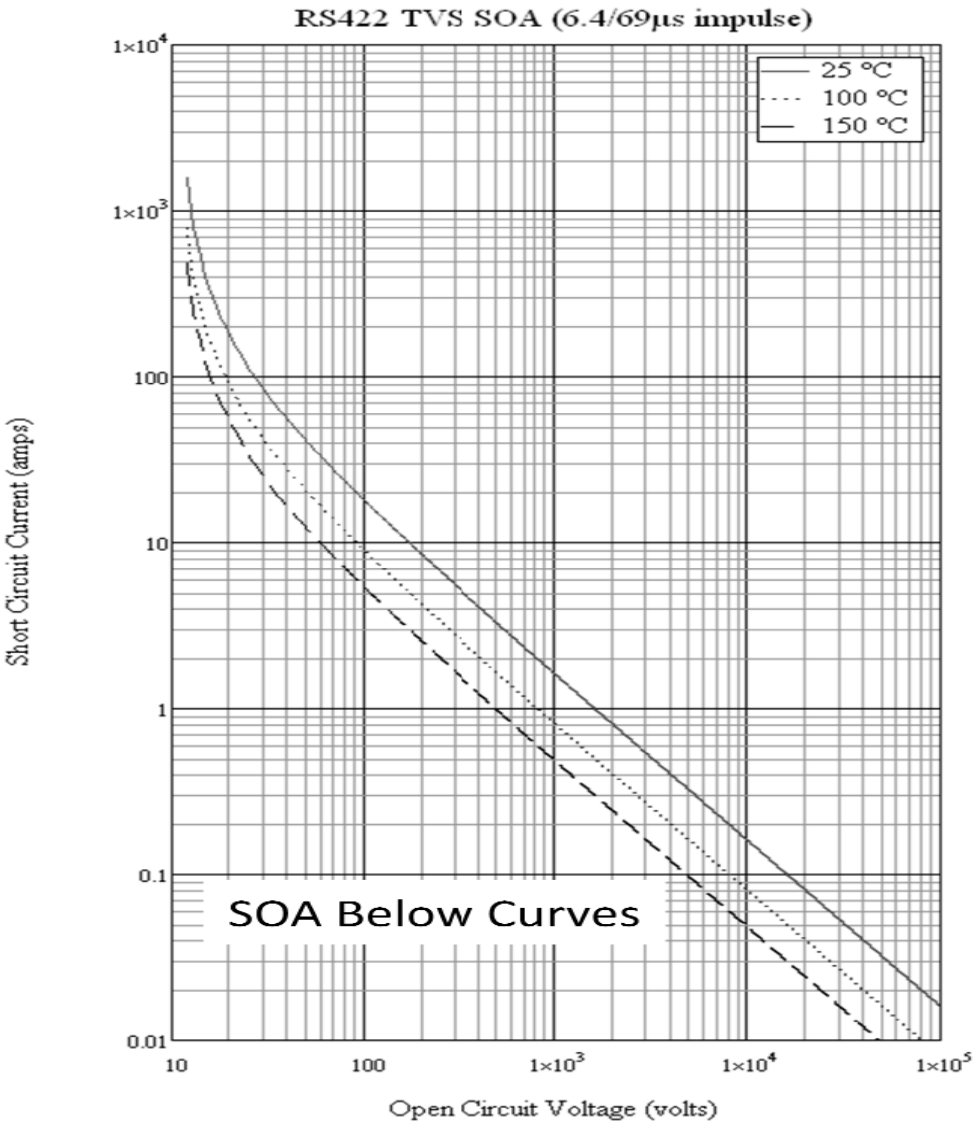

Figure 5-11: Safe Operation Area for TIA-422-B C&DH Serial Port [R.LIDS.5033]

5.3.6.2 C&DH TIA-422-B Interface

As described in Appendix F, the TIA-422-B interface is selected by not shorting the RS422_1553_SELECT_OUT with the RS422_1553_SELECT_IN pins on both systems.

The TIA-422-B interface is a point-to-point network topology. Each system will be connected to a dedicated TIA-422-B port on the host vehicle.

5.3.6.3 C&DH MIL-STD-1553B Interface

Each NDS system is a (separate) Remote Terminal (RT). The host vehicle is the Bus Controller (BC).

As described in Appendix F, the MIL-STD-1553B interface is selected by shorting the RS422_1553_SELECT_OUT with the RS422_1553_SELECT_IN pins on both systems.

The MIL-STD-1553B RT address for the NDS System is set in the host communications connector by shorting the appropriate RT address pins. Refer to Appendix F for the pin locations for signals RT_ADDR0, RT_ADDR1, RT_ADDR2, RT_ADDR3, RT_ADDR4, and RT_ADDR_PARITY. Odd Parity must be used when setting the RT address parity bit. Shorting each signal to its associated signal return will set it to a zero. Leaving the signal open will set it to a one.

The NDS provides the ability to receive a subset of the Mode Codes defined in MIL-STD-1553. The Mode Codes supported by NDS are listed in Table 5-3: NDS Implementation of MIL-STD-1553B Mode Codes . The message formats and behavior associated with Mode Code transactions are defined in MIL-STD-1553.

When the host vehicle (BC) requests data from the NDS, it will receive NDS H&S telemetry, NDS configuration packets, or Heater H&S telemetry packets from the NDS System, as described in Table 5-4: NDS and Heater MIL-STD-1553 Subaddresses. Described in detail in Appendix C and Appendix D, these packets comprise multiple subaddresses. For example, the 1024-byte H&S packet is divided across subaddresses 1 – 16.

There is no requirement for the NDS to zero-fill the unused (or spare) words in RT-to-BC messages when the size of the packet being transmitted is less than the maximum size the subaddress supports.

Table 5-3: NDS Implementation of MIL-STD-1553B Mode Codes

T/R	Mode Code	Function	Data Words	Implemented
1	00000	Dynamic Bus Control	No	No
1	00001	Synchronize w/o data word	No	No
1	00010	Transmit Status Word	No	Yes
1	00011	Initiate Self Test	No	Yes
1	00100	Transmitter Shutdown	No	Yes
1	00101	Override Transmitter Shutdown	No	Yes
1	00110	Inhibit Terminal Flag	No	No
1	00111	Override Inhibit Terminal Flag	No	No
1	01000	Reset Remote Terminal	No	Yes
1	01001 to 01111	Reserved	No	N/A
1	10000	Transmit Vector Word	Yes	No
0	10001	Synchronize w/Data word	Yes	No
1	10010	Transmit Last Command	Yes	Yes
1	10011	Transmit Built-In-Test Word	Yes	Yes
0	10100	Selected Transmitter Shutdown	Yes	No
0	10101	Override Selected Transmitter Shutdown	Yes	No
1/0	10110 to 11111	Reserved	Yes	N/A

Verify that this is the correct version before use

Table 5-4: NDS and Heater MIL-STD-1553 Subaddresses

Subaddress	BC to RT	RT to BC
00	Mode Code	Mode Code
01	Control SW Command (1)	Control SW Health & Status Data (1)
02	Control SW Command (2)	Control SW Health & Status Data (2)
03	Not used	Control SW Health & Status Data (3)
04	Not used	Control SW Health & Status Data (4)
05	Not used	Control SW Health & Status Data (5)
06	Not used	Control SW Health & Status Data (6)
07	Not used	Control SW Health & Status Data (7)
08	Not used	Control SW Health & Status Data (8)
09	Not used	Control SW Health & Status Data (9)
10	Not used	Control SW Health & Status Data (10)
11	Not used	Control SW Health & Status Data (11)
12	Not used	Control SW Health & Status Data (12)
13	Not used	Control SW Health & Status Data (13)
14	Not used	Control SW Health & Status Data (14)
15	Not used	Control SW Health & Status Data (15)
16	Not used	Control SW Health & Status Data (16)
17	Heater Controller Command	Heater Controller Status Data (1)
18	Not used	Heater Controller Status Data (2)
19	Not used	Heater Controller Status Data (3)
20	Not used	Control SW Config Status Data (1)
21	Not used	Control SW Config Status Data (2)
22	Not used	Control SW Config Status Data (3)
23	Not used	Control SW Config Status Data (4)
24	Not used	Control SW Config Status Data (5)
25	Not used	Control SW Config Status Data (6)
26	Not used	Control SW Config Status Data (7)
27	Not used	Control SW Config Status Data (8)
28	Not used	Not Used
29	Not used	Not Used
30	Data Read/Wrap	Data Read/Wrap
31	Mode Code	Mode Code

Table 5-4: NDS and Heater MIL-STD-1553 Subaddresses also shows the subaddresses that the host vehicle (BC) will use to send commands to the NDS. When multiple 1553 messages are grouped into a BC-to-RT transaction, and one or more of the 1553 messages in the transaction fails, the NDS system will disregard the entire transaction.

There is no requirement for the host vehicle to zero-fill the unused (or spare) words in BC-to-RT messages when the size of the packet being transmitted is less than the maximum size the subaddress supports. The MIL-STD-1553 requirement to zero-fill spares is not applicable to command transfers.

5.3.7 Heater Power and Control

The NDS has internal active heater elements, which allow it to survive and operate to the thermal levels described in Section 5.2.2.1. The NDS provides heater control for the docking system, which has controllable set points from the host [R.LIDS.1051]. Heater power is redundant with one heater circuit for NDS system A and another independent power input for system B. Heater control is independent of the NDS software control system; therefore, when the NDS control software (e.g., hook motors, SCS, etc.) is inhibited, the host can still control the heaters. In addition, NDS heaters have a default heater operation. This blind mode heater operation is to maintain the NDS within the thermal survivability range when being stored or displaced or if communication to the host vehicle is lost.

The NDS heater controller will have default values preprogrammed into the controller. If the controller starts up with no communications, it will use the internal default values for set points. If the controller is operating normally, and then looses communications, the last heater set points received will be used until another communications message is received or the heater controller is power cycled [R.LIDS.1141]. Each channel has a power requirement of 0 to 400 W at 120 Vdc, although only one channel is actively controlling a heater zone at a time while the other channel is powered and processing data (e.g., checking RTDs, sending H&S), ready to actively control the heater zone if the other channel fails [R.LIDS.5034]. Refer to JSC-64599, Electric Power Quality Description Document, for heater power timelines. Control for the heater is through the same serial port that is used to control the NDS described in Section 5.3.6. However, the commanding and H&S are processed separately. Refer to Appendix D: NASA Docking System (NDS) Heater Master Measurement List (MML).

a. A heater command is sent to the NDS from the host vehicle.
b. The NDS heater controller executes the command.
c. The NDS heater controller provides H&S data for the host vehicle.
    1. Each NDS heater controller gathers the required H&S parameters and creates their separate H&S packet at 1 Hz.
    2. Each NDS heater controller places its H&S packet within a transfer frame and computes/updates the CRC field.

Verify that this is the correct version before use

3. Each NDS heater controller transmits their H&S data to the host vehicle.
   i. For EIA-422B-based communication, each NDS heater controller transmits its H&S data via serial communication at 1 Hz.
   ii. For MIL-STD-1553B-based communication, the host vehicle determines the transfer rate of the H&S data. Each NDS (as remote terminals) transmits its H&S data in response to MIL-STD-1553B link layer command(s) from the host vehicle (the bus controller). The host vehicle must issue multiple MIL-STD-1553B link layer commands to receive a complete H&S transfer frame.

d. The H&S packet is received by the host vehicle and the packet is forwarded to the host vehicle's application software.

5.3.7.1 Heater Controller Thermal Constraints

The heater control system is housed within the NDS electronics boxes, which have a defined minimum operational temperature of -20 °F (-29 °C). If at any time the heater control system is unpowered (i.e., during launch, storage), the host must ensure that power is supplied to the heater control system before experiencing cold environments in which the electronics box temperatures fall below this minimum operational limit or other NDS components fall below their respective minimum survival temperature limits (JSC-65978, iLIDS Thermal Data Book).

5.3.8 Ground Support Equipment Software Interface-to-NDS

The NDS provides two Ground Support Equipment (GSE) connectors: one for system A and one for system B. The connectors allow for maintenance and upgrades. These connectors are not used by the host vehicle and will only be uncapped during maintenance. The GSE circuits allow direct access to the processor and the complex electronics.

5.3.9 Electrical Bonding Between the Host Vehicle and the NDS

The NDS establishes bond paths to mitigate electrical hazards on the ground test article and integrated subsystem interfaces. The electrical bond meets the requirements established in NASA-STD-4003, Electrical Bonding for NASA Launch Vehicles, Spacecraft, Payloads, and Flight Equipment. The NDS will be protected against RF emissions by maintaining a class-R/H bond at the NDS-to-host vehicle interface. The Direct Current (DC) bond resistance across the interface will be 2.5 milliohms or less.

The bond path will be through the chemical conversion coated metal-to-metal contact on the seal interface between the host vehicle and the NDS, and through the #8 wires provided in the umbilical for grounding/bonding. Refer to Figure 5-15.

5.4 NDS-to-Host Vehicle Software Interface

The NDS will receive commands from the host vehicle for docking, undocking, docking termination, undocking termination, pause docking, pause undocking, checkout, idle, and reconfigure. Refer to JSC-64096, Software Requirements Specification for the ILIDS Control System Software for details on software functionality modes and states.

The NDS will also validate commands from the host vehicle and send command responses to the host vehicle. Periodic Health and Status (H&S) data will be sent to the host vehicle at 50 Hz.

5.4.1 NDS-to-Host Vehicle Application Software Interface

This subsection describes the NDS-to-host vehicle application software interface. The host vehicle application software provides the vehicle interface for the NDS. It supports NDS-to-vehicle command and data processing and some NDS Fault Detection, Isolation, and Recovery (FDIR).

The following subsections contain Unified Modeling Language (UML) communication diagrams to illustrate the communication sequence. See Table 5-5: UML Communication Diagram Elements for details.

Table 5-5: UML Communication Diagram Elements

Communication Diagram Element	Description
	An actor is a user of the system.
	An object is a particular instance of a class at run time.
	An entity component typically passes information in and out of interfaces and is often persisted as a whole.
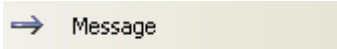	Messages indicate a flow of information or transition of control between elements.

5.4.1.1 NDS-to-Host Command Handling

Refer to Figure 5-12: Host Vehicle-to-NDS Command Handling Interface for a graphic depiction of the command handling process between the host vehicle and the NDS. Specific steps are described below.

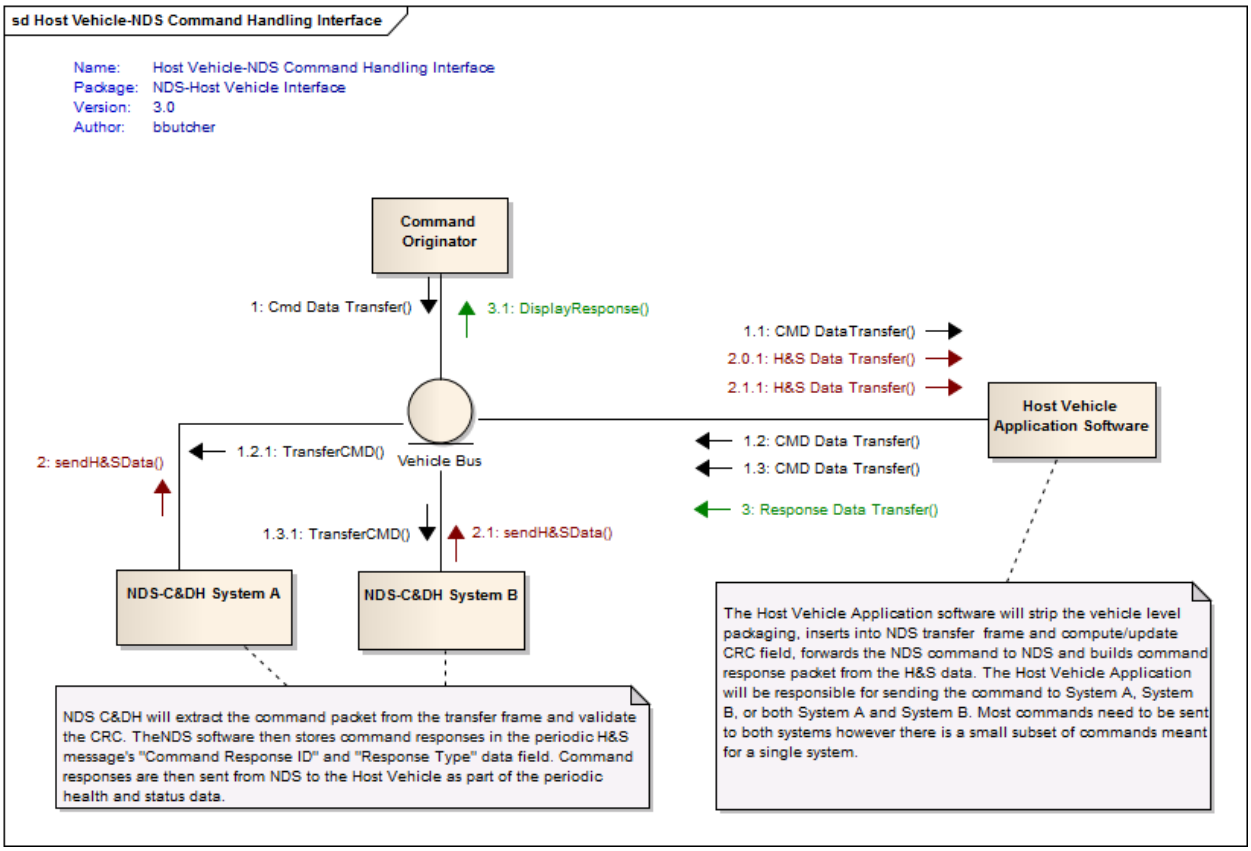

Figure 5-12: Host Vehicle-to-NDS Command Handling Interface

a. A command is sent to the NDS from the host vehicle application software.

   1. Depending on host vehicle implementation, the command may originate from the host vehicle displays and controls (i.e., crew initiated), from the host vehicle computer (i.e., automated docking), or from outside the host vehicle (i.e., ground or other vehicle initiated).

   2. The command packet is routed to the host vehicle application software, which then performs NDS command formatting:

      i. Inserts command into the transfer frame and computes/updates the CRC field.

      ii. Adds transfer frame sync pattern bits and CRC.

   3. Determines which NDS to send the command to, based on the Command Identification (CID). It is possible for a command to go to a single system or both systems, depending on the command. Each individual system/string does not know which one it is; only the vehicle knows which data path is tied to which system. (This requires the vehicle to have separate commands for such tasks as “Enable system A” and “Enable system B.”)

   4. Forward the NDS command to the correct NDS system (A and/or B).

b. The NDS receives the command and processes the command, which includes the following validation and execution steps:

   1. The NDS validates the CRC of the transfer frame containing the command packet.
   2. The NDS extracts the command packet from the transfer frame when the transfer frame contains a valid CRC.
   3. The NDS executes the command if the command is allowed in the current system Mode/State.
   4. The NDS updates the command response fields in the periodic H&S packet.
      i. The “Command Response ID” and “Command Response Type” fields of the H&S packet header are updated at 50 Hz to contain the status of the command processing performed during the current cycle. These fields will indicate when no command was processed during the current cycle.
      ii. The Payload portion of the H&S packet includes the command response state for the last command that was processed. This command response state remains persistent until a new command is processed.
   5. The NDS provides the updated periodic H&S packet to the host vehicle per Section 5.4.1.2, NDS-to-Host Vehicle H&S Data Handling.

c. The host vehicle’s application software receives an H&S packet from each NDS system and processes the command response based on the command response status field.

d. The response packet is then sent back to the command source.

5.4.1.2 NDS-to-Host Vehicle H&S Data Handling

Refer to Figure 5-13: Host Vehicle-to-NDS H&S Data Handling Interface for a graphic depiction of the H&S data handling process between the host vehicle and the NDS. Specific steps are described below.

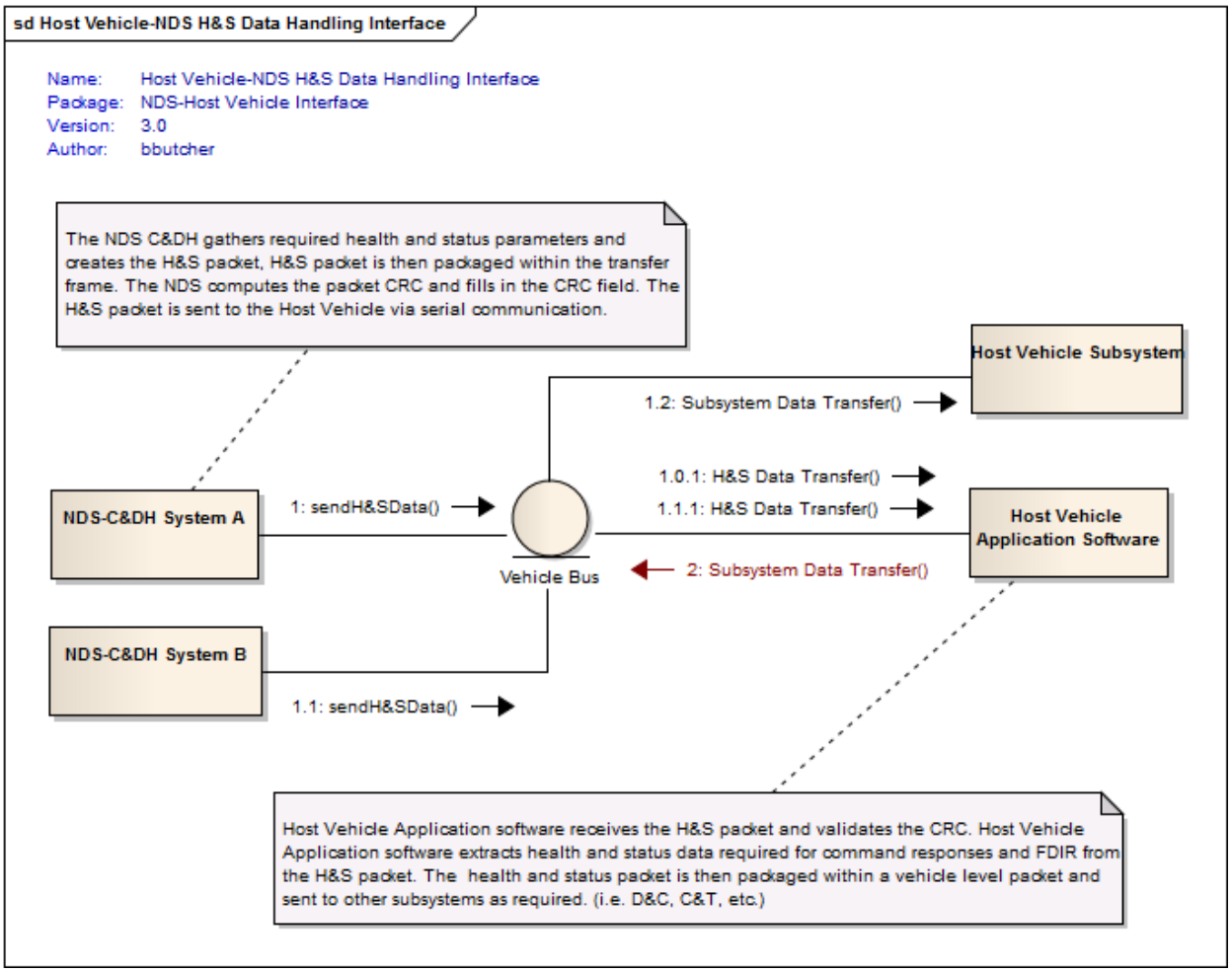

Figure 5-13: Host Vehicle-to-NDS H&S Data Handling Interface

a. The NDS provides H&S data for the host vehicle.

   1. Each NDS system gathers the required H&S parameters and creates its separate H&S packet at 50 Hz.

   2. Each NDS system places its H&S packet within a transfer frame and computes/updates the CRC field.

   3. Each NDS system transmits its H&S data to the host vehicle.

      i. For EIA-422B-based communication, each NDS system transmits its H&S data via serial communication at 50 Hz.

      ii. For MIL-STD-1553B-based communication, the host vehicle determines the transfer rate of the H&S data. Each NDS system (as remote terminals) transmits its H&S data in response to MIL-STD-1553B link layer command(s) from the host vehicle (the bus controller). The host vehicle must issue multiple MIL-STD-1553B link layer commands to receive a complete H&S transfer frame.

b. The packet is received by the host vehicle and the packet is forwarded to the host vehicle's application software.

c. The host vehicle's application software receives the H&S packet for system A and/or system B, and the following actions are performed:

   1. The CRC is validated.

   2. H&S data required for command responses and FDIR is extracted from the packet.

   3. The primary system H&S packet is then packaged within a vehicle-level packet and forwarded to required subsystems [i.e., Display and Control (D&C), Communication and Tracking (C&T)] (Note: An assumption has been made that only the primary NDS status will be sent to other applications.)

5.4.1.3 NDS FDIR

The NDS has two controllers: system A and system B. Systems A and B do not communicate directly with each other in any way, but both receive commands and provide health and status data to the host vehicle. During NDS operation, systems A and B are both turned on and are actively monitoring their sensors and sending power to their effectors (i.e., motors and magnets). In most cases, if there is a fault in a system that results in loss of that system's functionality, the healthy system can continue performing the desired function, albeit with some acceptable performance reduction. The linear actuators that control the motion of the soft capture system, however, are an exception.

The linear actuators are designed to receive power from only one system at a time. If the NDS detects a fault in system A, the host vehicle needs to switch control of the linear actuators to system B because the NDS cannot make this switch on its own. Since systems A and B do not communicate directly with each other, the fault switching function has to be performed in the host vehicle; in this example, the host vehicle would send a command to system A to become "non-primary" and a command to system B to become "primary." In the event of a subsequent failure in system B, the host vehicle logic will cause the vehicle's guidance, navigation, and control system to either abort, retreat, or hold position, depending on the phase of the docking process and other constraints.

Note that, similarly, if the non-primary system experiences a fault before the primary system does, the non-primary system remains non-primary. The host vehicle will have set a "flag" in its software to prevent switching to the already failed non-primary system, and the vehicle will abort upon the failure of the primary system.

If a fault requiring a switch to the redundant string is identified, a minimum amount of time is needed to switch between controllers in order to maintain safe control of the linear actuators, depending on the mode and state of the NDS. This switch time is most critical during dock mode capture and attenuation states.

The maximum total time required for a switch to take place from A to B is 580 ms. This time is from fault detection, output of the fault indicator in the NDS H&S data to the host vehicle, passage of the H&S message through the host vehicle's subsystem interfaces

and buses/networks into the flight computer/software that monitors the fault indicator to the time it takes for the host vehicle's switch command to traverse back to the NDS and for NDS to effect the switch. The total time has to be allocated between the NDS and the host vehicle. The host vehicle will be required to send the commands to switch primary control from system A to system B within 500 ms when it receives the indication from the NDS that a fault has been detected in the primary controller and needs to be switched to the backup controller. The backup controller measures the performance from the time the NDS provides the failure indication to the time the host vehicle's response commands cross the host vehicle-to-NDS interface. Refer to Figure 5-14: Host Vehicle-to-NDS FDIR Handling Interface.

For a complete description of how the host vehicle will respond to various NDS fault indications, reference Appendix G, NDS Control System Failure Response Table.

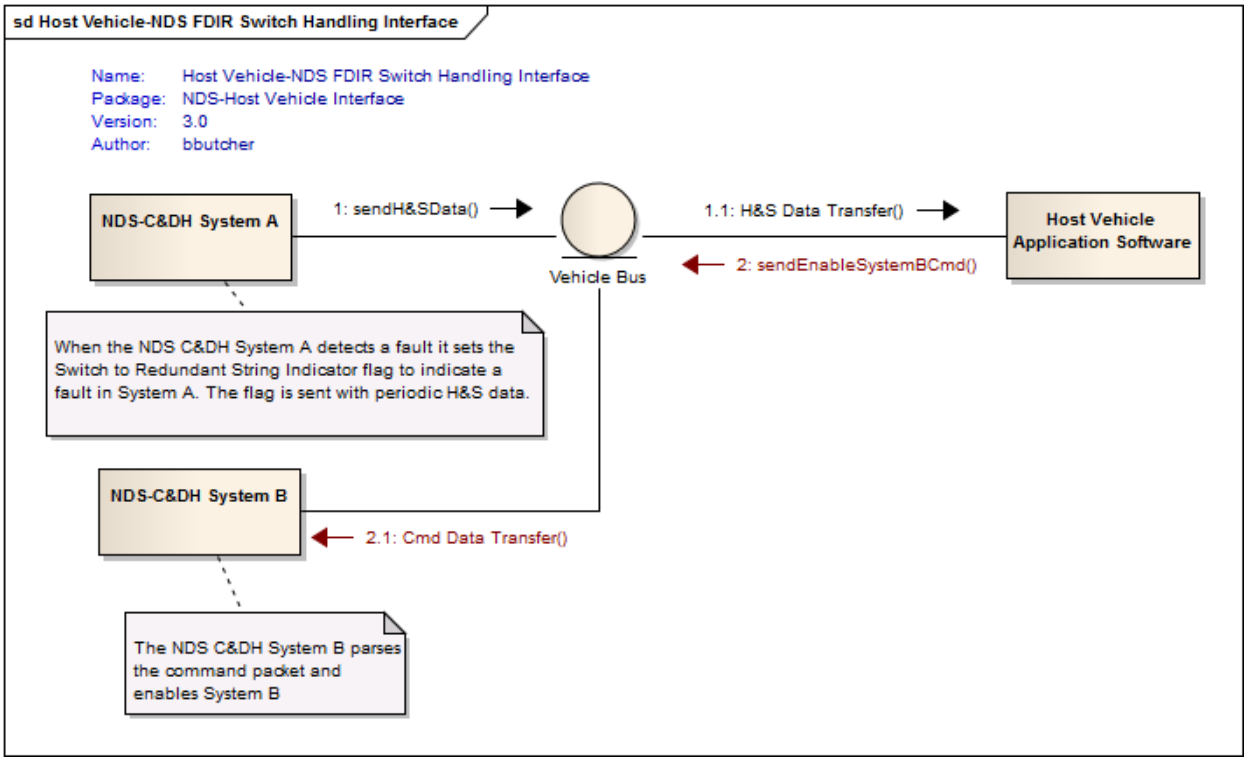

Figure 5-14: Host Vehicle-to-NDS FDIR Handling Interface

1. The host vehicle's application software parses the H&S packet of the primary system for required FDIR parameters.
   a. The host vehicle's application software will monitor the NDS H&S switch to the redundant string indicator to determine if the NDS has detected a fault and is requesting to be switched to system B (system A or string A is commanded to primary prior to NDS operation; automatic switching from system B back to system A is not currently planned).
   b. FDIR will also monitor the "heartbeat" at 50 Hz to determine if a system (or redundant string) has failed. (The heartbeat may be the combination of a sequence counter in the H&S packet as well as receiving the H&S packet.)

2. During each processing cycle, the host vehicle's application software checks that the periodic heartbeat was received. If the heartbeat is missing or corrupt for three cycles from currently enabled system (redundant string), then:
   a. The host vehicle's application software powers down NDS system A.
   b. The LIDS_CMD_ENABLE SYSTEM command is sent to NDS system B.
3. If the heartbeat exists, the host vehicle's application software checks the switch to redundant string indicator to see if a system (redundant string) switch is required. If a switch to system B is required and the system B failure flag has not been set, then:
   a. If NDS or the host vehicle detects a system failure, the host vehicle's application software powers down NDS system A; otherwise, the LIDS_CMD_DISABLE_SYSTEM command is sent to NDS system A..
   b. The LIDS_CMD_ENABLE_SYSTEM command is sent to NDS system B.

If the system B failure flag has been set. indicating that a failure has occurred in system B, the host vehicle would either abort, retreat, or hold position, based on the phase of the current mode.

Note: The enable system command makes that system "primary." The term, "primary" only has meaning with respect to linear actuator control. The only thing that makes a system primary is the act of enabling the linear actuator effector control output. Only one string can control the linear actuators at one time. However, both strings always control all other mechanisms.

5.4.1.4 NDS i-LOADS Parameters for Docking or Berthing Operations

The NDS is reconfigurable in flight for different performance capabilities, depending on mission requirements, such as a vehicle docking or berthing with a large mass space-station-type vehicle, and later, docking or berthing with a lighter mass vehicle. Each required different performance capability of the docking system is set by commanding the NDS to use a predefined initialization load (i-Load) that sets all the performance parameter values needed for that particular docking or berthing operation. These performance parameters set limits, apparent stiffnesses (dictated by masses of the vehicles), and any other parameters designed into the NDS that are mission-dependant. Future revisions of the NDS IDD will further define the i-Load capability.

5.4.2 NDS Packet Structures

The NDS communications will consist of two application-level packet structures that include a command packet and an H&S packet. The command packet will be used by the host vehicle to command the NDS operations. NDS data packets are 32-bit word aligned and use big-endian byte ordering. The command packet has a size of 64 Bytes, including the transfer frame. See Table 5-6: Host Vehicle-to-NDS Command Packet for details. See Table 5-7: Host Vehicle-to-NDS Command Packet Parameters for parameter definitions.

Table 5-6: Host Vehicle-to-NDS Command Packet

Primary Header							Packet Data Field			
							Secondary Header			Payload
Version (3 bits)	Packet Identification			Packet Seq. Control		Packet Data Length (16 bits)	Time-stamp (64 bits)	Command ID (16 bits)	Reserved (16 bits)	Payload (40 Bytes)
	Type (1 bit)	Sec Hdr Flag (1 bit)	Application ID (11 bits)	Seg. Flag (2 bits)	Source Seq. Count (14 bits)					

Table 5-7: Host Vehicle-to-NDS Command Packet Parameters

Field Name	Size	Values	Description
Version	3 bit	0	Consultative Committee for Space Data Systems (CCSDS) packet version ‘000.’
Type	1 bit	1	1 identifies command packets.
Sec Hdr Flag	1 bit	1	1 indicates a secondary header.
Application ID	11 bits	0	Currently unused; may be used later to determine command source.
Segmentation Flag	2 bits	0x11	Will be 0x11 to indicate an unsegmented packet.
Source Seq Count	14 bits	0-16383	Packet sequence counter.
Packet Data Length	16 bits	51	This 16-bit field shall contain a length count ‘C’ that equals one fewer than the length (in octets) of the Packet Data field. The length count ‘C’ shall be expressed as: C = (total number of octets in the Packet Data field) – 1.
Time-stamp	64 bits	32-bit sec field and 32-bit micro-seconds field	Currently, a relative time-stamp from when the processor is powered on. Used for data logging and debugging.
Command ID	16 bits	Defined in Appendix C	Commands will have a minimum hamming distance of 3 to eliminate the possibility of incorrect command execution with up to two bit flip errors in the CID.
Reserved	16 bits	0	Reserved field (currently used to keep 32-bit alignment).
Payload	40 Bytes	Defined in Appendix C	The payload will consist of 10 command arguments (32-bit) data fields.

The H&S packet will be used to send periodic H&S data to the host vehicle at a rate of 50 Hz. This data will include command responses and measurements. The H&S packet has a maximum size of 1024 Bytes, including the transfer frame. See Table 5-8: NDS-to-Host Vehicle H&S Packet for details. See Table 5-9: NDS-to-Host Vehicle H&S Packet Parameters for parameter definitions.

Table 5-8: NDS-to-Host Vehicle H&S Packet

Primary Header							Packet Data Field				
							Secondary Header				Payload
Version (3 bits)	Packet Identification			Packet Seq. Control		Packet Data Length (16 bits)	Time-stamp (64 bits)	Command Response ID (16 bit)	Command Response Type (8 bits)	Reserved (8 bits)	Payload (1000 Bytes Max)
	Type (1 bit)	Sec. Hdr. Flag (1 bit)	Application ID (11 bits)	Seg. Flags (2 bits)	Source Seq. Count (14 bits)						

Table 5-9: NDS-to-Host Vehicle H&S Packet Parameters

Field Name	Size	Values	Description
Version	3 bit	0	CCSDS packet version ‘000.’
Type	1 bit	0	0 identifies telemetry packets.
Sec Hdr Flag	1 bit	1	1 Indicates a secondary header.
Application ID	11 bits	Defined in Table 5-8	Used to indicate packet such as H&S, Configuration, etc.
Segmentation Flag	2 bits	0x11	Will be 0x11 to indicate an unsegmented packet.
Source Seq Count	14 bits	0-16383	Packet sequence counter.
Packet Length	16 bits	1011 (H&S packet) 499 (Config packet)	This 16-bit field shall contain a length count ‘C’ that equals one fewer than the length (in octets) of the Packet Data field. The length count ‘C’ shall be expressed as: C = (total number of octets in the Packet Data field) – 1.
Time-stamp	64 bits	32-bit sec field and 32-bit micro-seconds field	Currently, a relative time-stamp from when the processor is powered on. Used for data logging and debugging.
Command Response ID	16 bits	Defined in Appendix C	Command ID of the command being reported on.
Command Response Type	8 bits	Defined in Table 5-9	Command response such as “Valid,” “Invalid,” “Received,” and “Executed.”
Reserved	8 bits	0	Reserved field (currently used to keep 32-bit alignment between secondary header and payload).
Payload	1000 Bytes Max	Defined in Appendix C	H&S payload packet defined in the Command and Data Dictionary.

The H&S packet can be used for different types of data transfer. These types and sizes will be predefined in Table 5-10: NDS-to-Host Vehicle H&S Packet Types. The configuration parameter packet will be sent to the host vehicle at a rate of 1 Hz when the NDS software is in “Safe” mode and in the configuration state. The configuration packet will replace the final H&S packet in a major frame. The configuration packet will be sent sequentially from packet 1 to 10 with the effective rate of 1/10 Hz per configuration packet. The packet type identifier will be created using a minimum hamming distance of 3, which will ensure that more than two bit flips would be required to misrepresent a packet type. See Table 5-12: Transfer Frame Packet Structure for details.

Table 5-10: NDS-to-Host Vehicle H&S Packet Types

Packet Name	Packet Type ID	Packet Size (without frame)	Description
Periodic H&S	0x07	1018 Bytes	The periodic H&S packet will be transmitted at 50 Hz and will be the default packet used for FDIR and command response.
Configuration Packet 1	0x19	506 Bytes	Basic Configuration Data
Configuration Packet 2	0x1E	506 Bytes	FDIR Configuration Packet 1
Configuration Packet 3	0x2A	506 Bytes	FDIR Configuration Packet 2
Configuration Packet 4	0x33	506 Bytes	Filter Configuration Packet 1
Configuration Packet 5	0x34	506 Bytes	Filter Configuration Packet 2
Configuration Packet 6	0x4B	506 Bytes	Filter Configuration Packet 3
Configuration Packet 7	0x4C	506 Bytes	Filter Configuration Packet 4
Configuration Packet 8	0x52	506 Bytes	Filter Configuration Packet 5
Configuration Packet 9	0x55	506 Bytes	Filter Configuration Packet 6
Configuration Packet 10	0x61	506 Bytes	Filter Configuration Packet 7
GSE HCS Packet	0x66	1018 Bytes	Hard Capture System GSE Packet
GSE SCS Packet 1	0x78	1018 Bytes	Soft Capture System GSE Packet 1
GSE SCS Packet 2	0x181	1018 Bytes	Soft Capture System GSE Packet 2
GSE SCS Combined Packet	0x186	1018 Bytes	Soft Capture System Combined GSE Packet
Reserved	0xFE	N/A	SIM to GSE Packet
Reserved	0x2D	N/A	Reserved for the Heater Packet

Command responses will be transmitted using the command response and response type data fields of the H&S packet. The command response will be transmitted once per command received. Command response history can be obtained in the H&S payload data. See Table 5-11: NDS-to-Host Vehicle H&S Command Response Types for details.

Table 5-11: NDS-to-Host Vehicle H&S Command Response Types

Response Name	Response Type ID	Description
Command Received	0x07	Command response to indicate the command has been received.
Command Valid	0x19	Command response to indicate the CID, parameters, state/mode are valid.
Command Invalid	0x1E	Command response to indicate either the CID, parameters, state/mode are invalid.
Command Executed	0x2A	Command response to indicate the command has been executed.

The NDS uses a transfer frame format that includes a sync marker and a 16-bit CRC for Transmit (TX) and Receive (RX) messages. The maximum size of the packet including the payload and transfer frame overhead is 1024 Bytes. See Table 5-12: Transfer Frame Packet Structure for details. See Table 5-13 for parameter definitions.

Table 5-12: Transfer Frame Packet Structure

Frame Header	Payload Data Field	Frame Trailer
Sync Marker (32 bit) 1ACFFC1D	CCSDS Packet (H&S – 1018 Bytes) (CONFIG – 506 Bytes) (CMD – 58 Bytes)	CRC (16 bit)

Table 5-13: Transfer Frame Parameter Definitions

Name	Size	Values	Description
Sync Marker	32 bit	1ACFFC1D	Sync marker is a 32-bit data field used to indicate the beginning of a packet.
Payload	1018 Byte Max	Table 5-6 and Table 5-8	Payload packet defined above in Table 5-6 and Table 5-8
CRC	16 bit	Variable	CRC-CCITT defined in Table 5-14.

The CRC field will be used to ensure that the message was not corrupted during transmission. The CRC-CCITT algorithm has been chosen due to its popularity among other protocols such as High-Level Data Link Control (HDLC) and CCSDSs. The CRC is calculated for the entire length of the transfer frame payload data field, excluding the sync marker and CRC. See Table 5-14: CRC-CCITT Parameters for details.

Table 5-14: CRC-CCITT Parameters

Algorithm	CRC-CCITT
Width:	16 bits
(Truncated) Polynomial:	0x1021
Initial Remainder:	0xFFFF
Final XOR Value:	0x0000
Reflect Data:	No
Reflect Remainder:	No

5.4.3 NDS Data Transfer

5.4.3.1 TIA-422-B Serial

The NDS will transmit packets using two independent serial data (TIA-422-B) command/control paths from the host vehicle as system A and system B. See Table 5-15: NDS-to-Host Vehicle C&DH Interface Layers for details. The data will be transferred in network byte order (big-endian).

Table 5-15: NDS-to-Host Vehicle C&DH Interface Layers

Layer #	C&DH Interface Layers	Implementation
5, 6, 7	Data Layer – C&DH Packets	See Table 5-6 and Table 5-8.
3, 4	Network/Transport Layer – Transfer Frame Packet	See Table 5-12.
2	Data Link Layer – Frame UART definition	921.6 K baud, 8 bits data, no parity, 1 start bit, 1 stop bit, no flow control.
1	Physical Layer – TIA-422-B	4-wire + return + shield.

The NDS will transmit and receive data to/from the host vehicle at 921.6 kbits/sec. The bit rate will be fixed.

5.4.3.2 MIL-STD-1553B

The NDS will transmit packets using two independent MIL-STD-1553B command/control paths from the host vehicle—system A and system B.

Table 5-16: NDS-to-Host Vehicle C&DH Interface Layers

Layer #	C&DH Interface Layers	Implementation
5, 6, 7	Data Layer – C&DH Packets	See Table 5-6 and Table 5-8.
3, 4	Network/Transport Layer – Transfer Frame Packet	See Table 5-12.
2	Data Link Layer – 1 MHz Manchester II Bi-phase	1 Mb/s baud, 3 sync bits + 16 data bits + 1 parity bit per word, 32 words per message, sync/async half-duplex with command/response protocol.
1	Physical Layer – MIL-STD-1553B Differential Serial	Twisted shielded pair (twinaxial).

The NDS will transmit and receive data to/from the host vehicle at a maximum rate of 1 Mbits/sec across a maximum of 31 remote terminals with each remote terminal accessing the data across a maximum of 30 subaddresses.

5.4.4 Command List

The command list is maintained in an attached file to this IDD (Refer to Appendix C). The command list contains detailed command information such as valid mode/state, CID, parameters, and valid ranges. CIDs are created using a minimum hamming distance of 3, which will ensure that more than two bit flips would be required to misrepresent a CID.

5.4.5 Measurement List

The measurement list is maintained in an Excel spreadsheet and is part of this IDD. The measurement list contains MSID, data range, measurement type, size, and units. Refer to Appendix C for the Command and Data Dictionary.

5.5 NDS-to-Host Vehicle Connectors Locations

This section defines the NDS-to-host connector location. Refer to Section 5.3 for electrical interface details. Refer to Figure 5-15: NDS (excluding -302 and -305)-to-Host Vehicle Electrical Interface, Figure 5-16: NDS (excluding -302 and -305) Box Connections-to-Host Vehicle Electrical Interface [R.LIDS.5038] Figure 5-17: NDS (excluding -302 and -305) Tunnel Connections-to-Host Vehicle Electrical Interface [R.LIDS.5036], and Figure 5-18: NDS (-302 and -305)-to-Host Vehicle Electrical Interfaces for NDS-to-Host Vehicle connector locations.

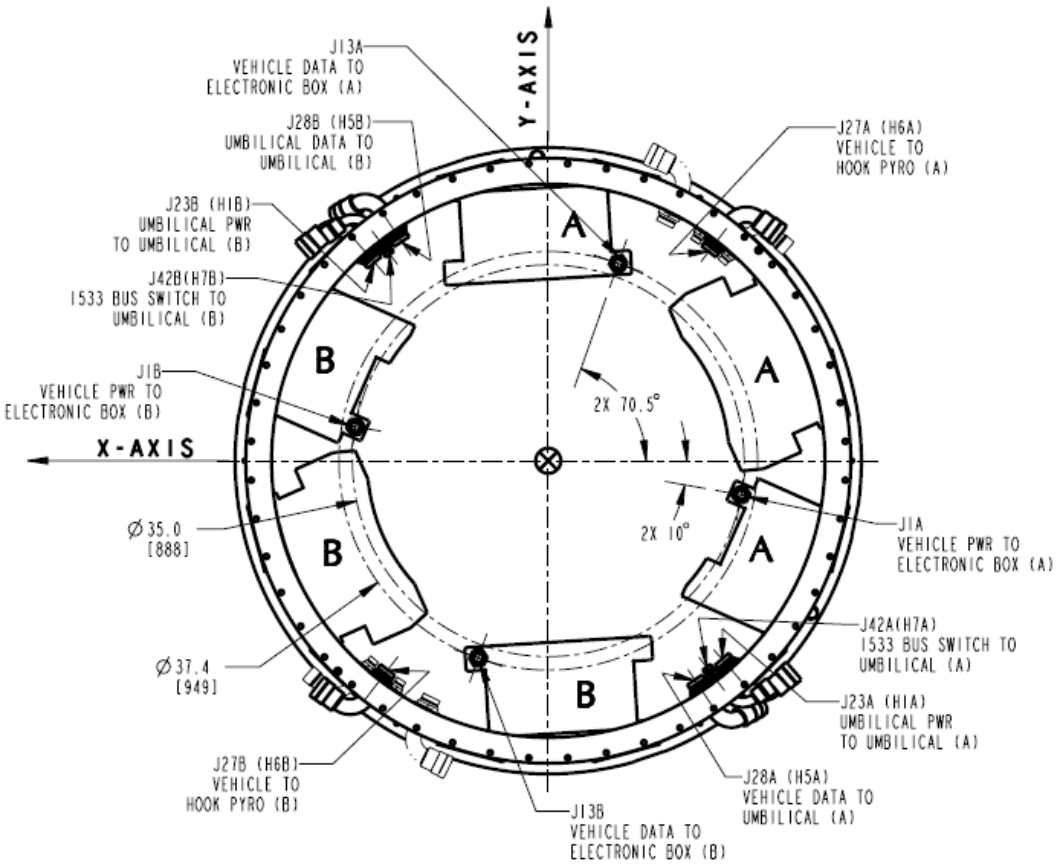

Note: Pyro connectors are excluded from -304.

Figure 5-15: NDS (excluding -302 and -305)-to-Host Vehicle Electrical Interface

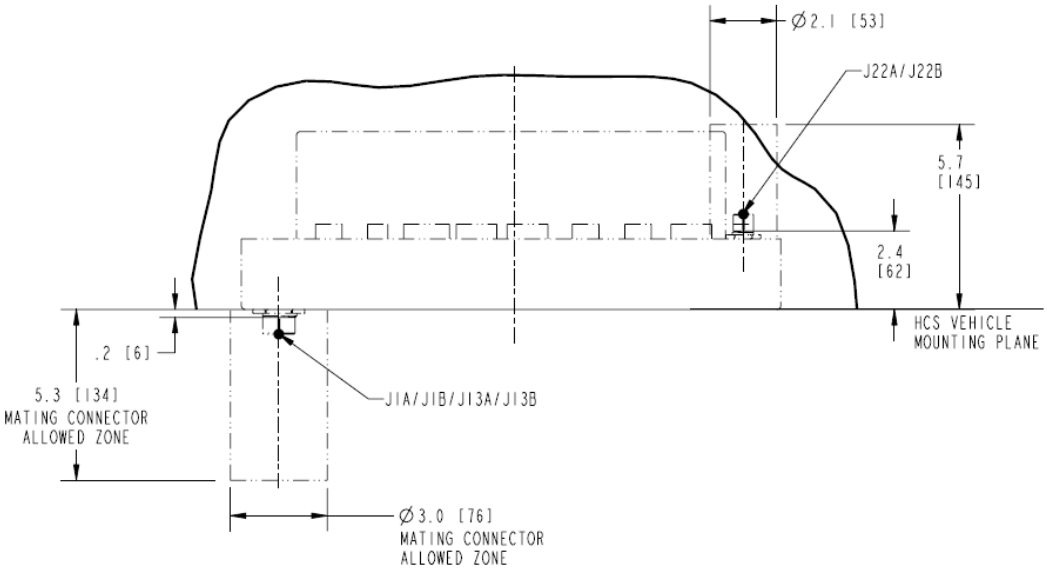

Figure 5-16: NDS (excluding -302 and -305) Box Connections-to-Host Vehicle Electrical Interface [R.LIDS.5038]

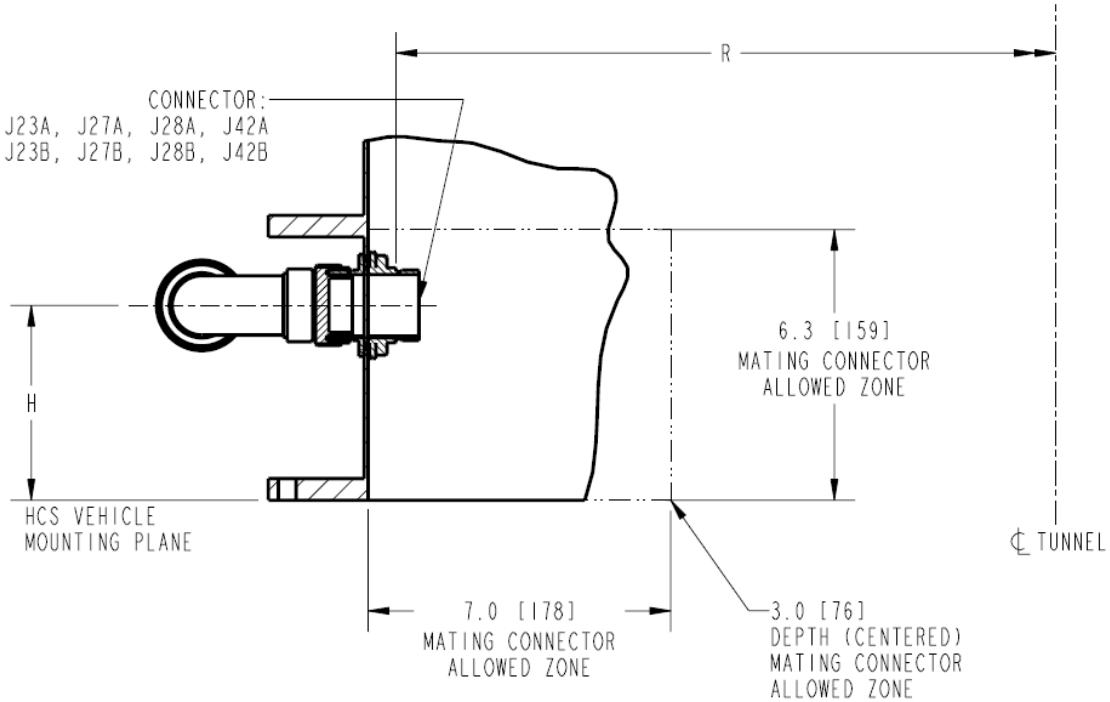

Note: Refer to Figure 5-2 and Table 5-17 for values of H and R dimensions.

Figure 5-17: NDS (excluding -302 and -305) Tunnel Connections-to-Host Vehicle Electrical Interface [R.LIDS.5036]

Table 5-17: NDS (excluding -302 and -305) Tunnel Connections-to-Host Vehicle Locations

Connector	Size	H in. (mm)	R in. (mm)
J23A/B (PWR)	25	3.95 (100.3)	24.375 (619)
J27A/B (PYRO)	13	3.75 (95.3)	24.375 (619)
J28A/B (DATA)	13	4.5 (114.3)	24.355 (618.6)
J42A/B (BUS)	13	2.0 (50.8)	24.355 (618.6)

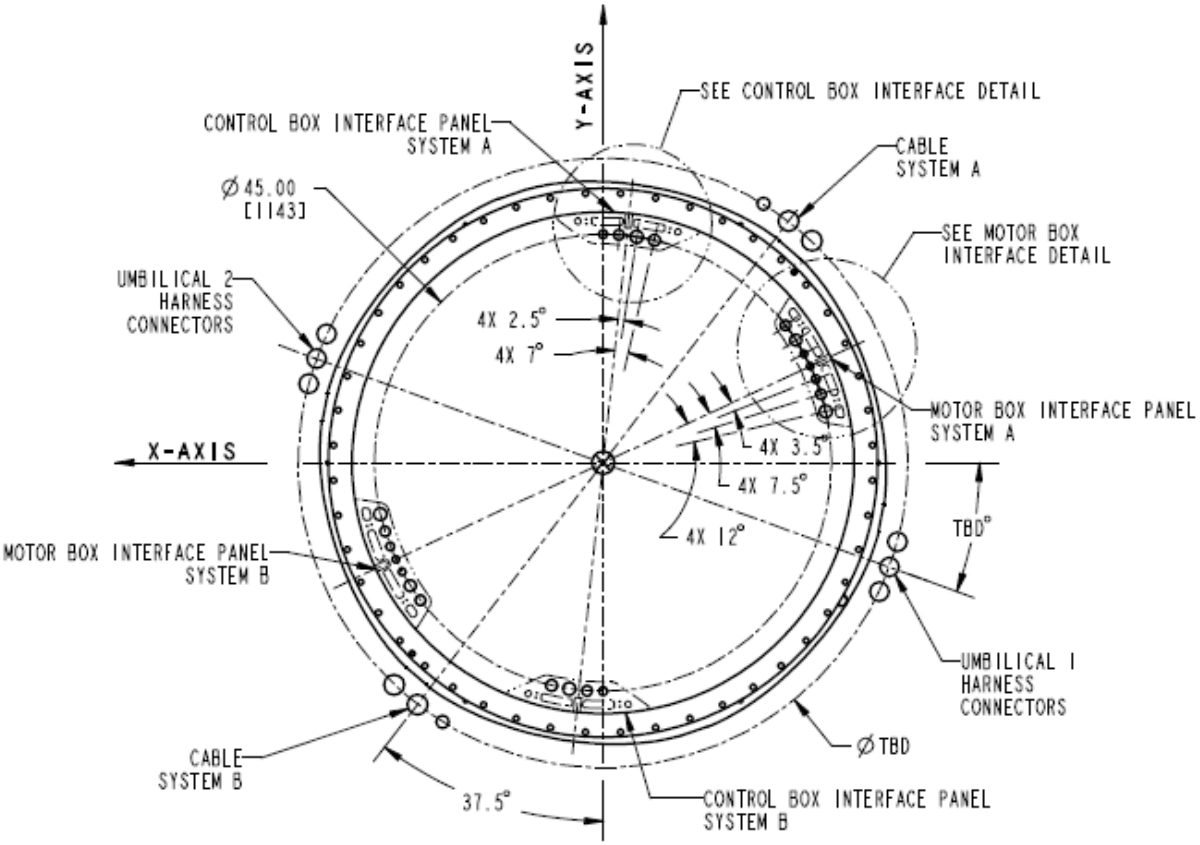

View looking at NDS mounting flange from the host.

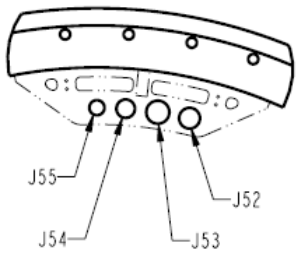

Control Box Interface Detail

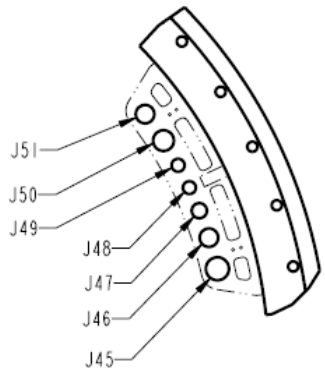

Motor Box Interface Detail

Figure 5-18: NDS (-302 and -305)-to-Host Vehicle Electrical Interfaces

5.5.1 NDS (excluding -302) Power Transfer Interface to Host Vehicle Connector Location

Refer to Section 4.3.1 for a description of NDS power transfer capability and Section 5.3.1 for a description of the power transfer electrical interface to the host vehicle.

5.5.1.1 NDS (-302) Power Transfer Interface to Host

The NDS (-302) power transfer host interface is a responsibility of the host vehicle. The host must provide the cable and connector. NDS (-302) provides the mechanical interface for the umbilical connector only. Refer to SLZ29101649, Umbilical EMA Specification Control Drawing.

5.5.2 NDS (excluding -302) Data Transfer Interface to Host

Refer to Section 4.3.1 for a description of NDS data transfer capability and Section 5.3.2 for a description of the data transfer electrical interface to the host. Refer to Figure 5-18 for the location of the connector to the host interface.

5.5.2.1 NDS (-302) Data Transfer Interface to Host

The NDS (-302) data transfer host interface is a responsibility of the host vehicle. The host must provide the cable and connector. NDS (-302) provides the mechanical interface for the umbilical connector only. Refer to SLZ29101649, Umbilical EMA Specification Control Drawing.

5.5.3 Water Transfer

The NDS may add water source and water transfer as a future block upgrade capability.

5.5.4 Fuel Transfer

The NDS may add fuel transfer as a future block upgrade refueling capability.

5.5.5 Pressurant Transfer

The NDS may add tank pressurization for fuel and oxidizer transfer as a future block upgrade capability.

5.5.6 Oxidizer Transfer

The NDS may add oxidizer transfer as a future block upgrade refueling capability.

Verify that this is the correct version before use

6.0 NDS-TO-GROUND SUPPORT EQUIPMENT INTERFACE

The NDS contains features built in to accommodate GSE interfaces for attaching lifting hardware, seal protective covers, bell jars, and electrical connectors.

6.1 Structural/Mechanical

6.1.1 Lifting Interface

Refer to Figure 4-13 for details showing lift points. The lift points are designed for a vertical lift only and requires the use of an NDSP-provided spreader bar.

6.1.2 Seal Cover Interface

NDSP-provided upper and lower seal covers will provide protection for the seals during handling and shipping of the NDS hardware.

The upper seal protective cover attaches to the upper seal surface of the NDS through the six .375-16 lift attach points per Figure 4-14. When lifting the NDS, the seal cover attach fasteners are replaced with the lift hardware at the lift attach points. It is not necessary to remove the upper seal cover to use the lift hardware.

The lower seal cover attaches to the NDS lower surface through the NDS-Host Vehicle mounting interface holes per Figure 5-3.

6.1.3 Pressure Dome Interfaces

NDSP-provided upper and lower pressure domes will be used for seal leak tests during ground testing. In addition to ground testing of seal leaks, the upper pressure dome will be used for leak testing of the upper seal while mounted to a vehicle.

The upper dome will attach to the NDS by engaging the NDS passive hook with a manually activated hook on the pressure dome side. The upper pressure dome includes pins and sockets to align with the NDS alignment pins. Figure 4-14 shows the specific alignment pin and hook locations.

The lower pressure dome that will be used in ground testing of the NDS will attach to the NDS through the 48 NDS-to-vehicle bolt pattern. Refer to Figure 5-3.

6.1.4 Pressure Seal Interface, Pass-Through Connectors

The NDS pass-through connectors are designed to accommodate bell jars to measure leaks around pass-through connectors during ground tests. The surface surrounding the connectors on the outside of the tunnel provide a flat surface for the sealing of the bell jar to the tunnel.

6.1.5 Pressure Seal Interface, Test Ports

Two pressure test ports are located on the NDS host seal interface (excluding -302 and -305) to provide the capability to perform individual seal leak tests of the host seal interface on the ground prior to host integration and while integrated to the host vehicle.

Verify that this is the correct version before use

The ports are located 180 degrees apart with access from the outside of the NDS tunnel. The NDSP provides GSE to support leak testing. Refer to Figure 6-1: Leak Test Port Locations (excluding -302), Figure 6-2: Leak Test Port Cross Section, and Figure 6-3: Leak Test Port Detail. For -302 and -305, the host must provide the leak check ports and GSE to support leak testing once NDS is integrated on the host vehicle.

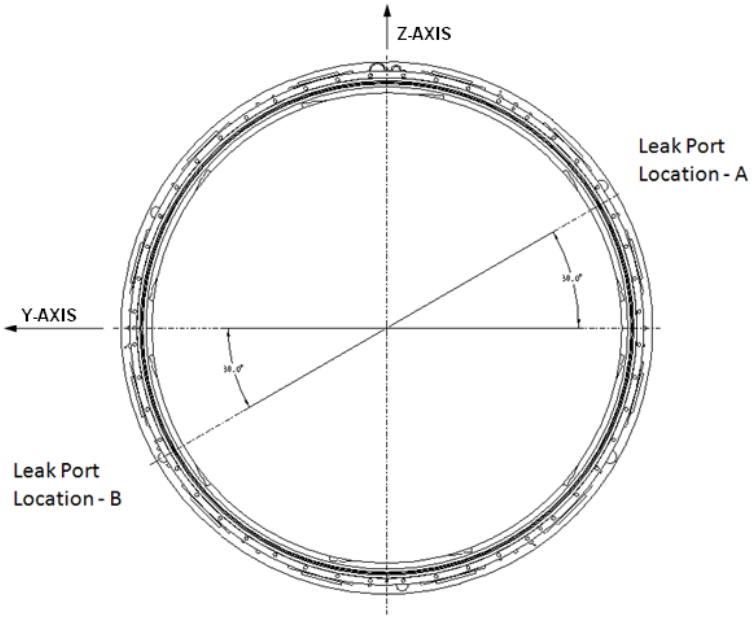

Figure 6-1: Leak Test Port Locations (excluding -302)

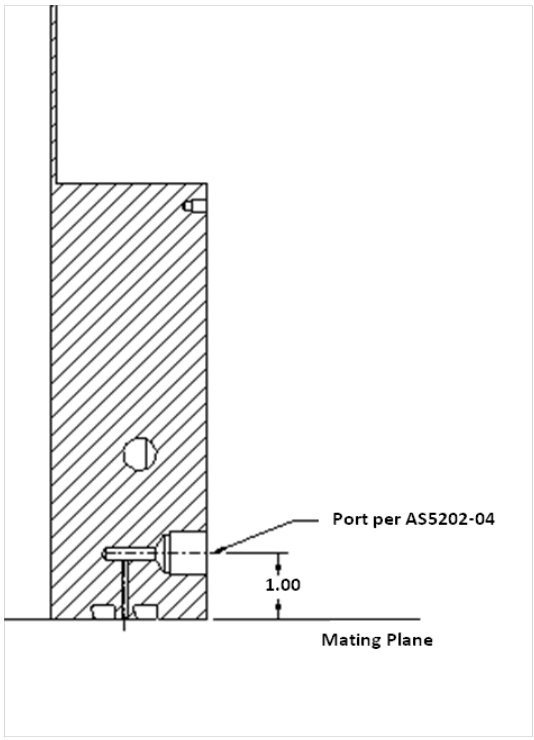

Figure 6-2: Leak Test Port Cross Section

Verify that this is the correct version before use

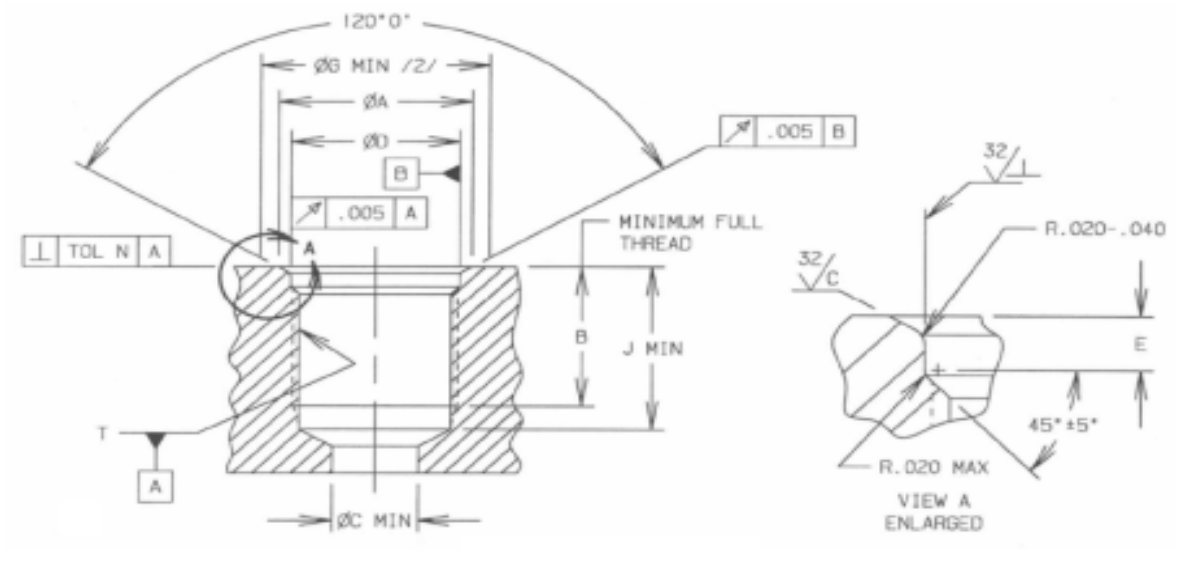

BASIC NO. AS5202 /9/ SIZE CODE	(NOMINAL TUBE SIZE)	T THREAD PER AS8879 CLASS 3B	A -.000/+.015	B	C	D -.000/+.005	E -.000/+.015	G	J	N
04	.250	.4375-20-UNJF	.562	.568	.172	.454	.075	.728	.656	.003

Figure 6-3: Leak Test Port Detail

6.1.6 Handling Fixture Interface

NDSP-provided handling fixtures interface to the NDS through the 48 NDS-to-vehicle bolt pattern as shown in Figure 6-4: Handling Fixture Interface to NDS Bolt Pattern. The lower seal cover will remain on the NDS while using the handling fixture, providing protection to the seals.

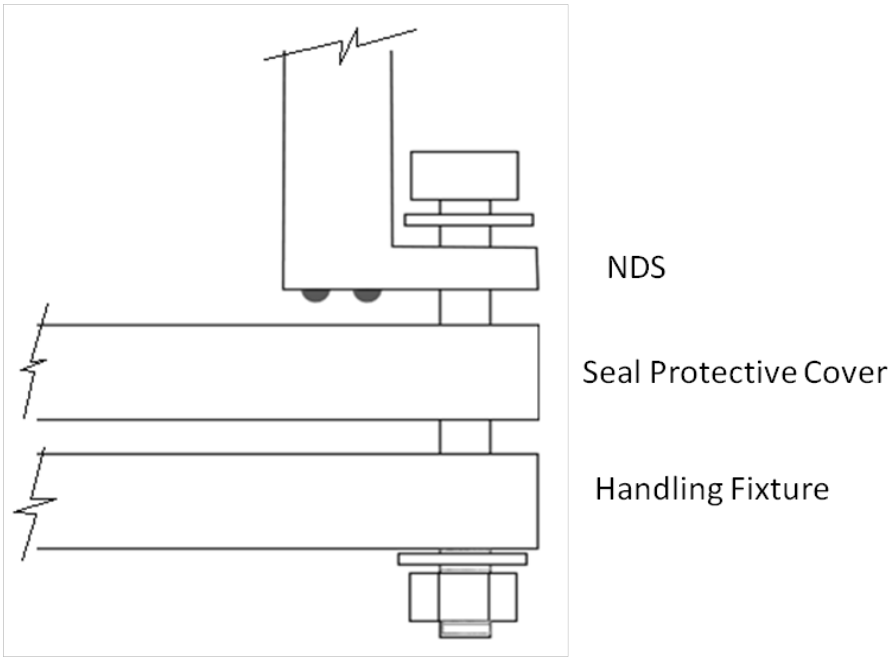

Figure 6-4: Handling Fixture Interface to NDS Bolt Pattern

Verify that this is the correct version before use

6.1.7 Instrument Checkout

The NDS will use a sensor ring to simulate docking during ground testing. The sensor ring will be equipped to activate a capture sensor for functional validation prior to flight. The sensor ring will interface to the NDS through the six .375-16 lift attach points specified in Figure 4-14.

6.2 Electrical Interfaces for Command and Data Handling

The NDS assembly will provide a dedicated GSE connector on the NDS control box. NDS will provide GSE software with a Graphical User's Interface (GUI) for an engineering evaluation of the unit via the dedicated GSE connector. The GSE software can be run on a standard laptop and will allow commanding as well as H&S data viewing. Refer to Figure 5-15.

Verify that this is the correct version before use

7.0 HOST REQUIREMENTS FOR NASA DOCKING SYSTEM INTEGRATION

This section defines the requirements that the host must meet in order to control integrated host/NDS hazards and/or specific host requirements to integrate the NDS. The methodology for hazard control is based on SSP 30309, Safety Analysis and Risk Assessment Requirements Document and SSP 50021, Safety Requirements Document. The majority of the following host requirements listed in Table 7-1: Host Requirements have corresponding hazards listed in JSC-63688, Risk Assessment Executive Summary Report (RAESR) for the International Low Impact Docking System (iLIDS), Table 5.4-2 (Cross reference Host Requirement ID, e.g. R.LIDS.6000). The "References" column indicates the IDD section or PTRS requirement related to the host requirement. The NDSP is not responsible for verification of these requirements. It is incumbent on the host to perform any analysis or test necessary to meet these requirements.

Table 7-1: Host Requirements

Host Requirement ID	Requirement	References
R.LIDS.6072	The host vehicle mating to NDS shall meet the interface definition in Section 4.0. Note: This can be accomplished by using an NDS or an NDS-compatible system.	4.0.
R.LIDS.6073	The host vehicle integrating NDS shall meet the interface definition in Section 5.0.	5.0.
R.LIDS.6000	The vehicle supplying umbilical power shall prevent Extravehicular Activity (EVA) crew contact with exposed voltages while the umbilical connectors are unmated by either (a) ensuring the cables that lead to the umbilical connectors are disconnected, (b) by ensuring a minimum of three inhibits are in place, or (c) ensuring the crew will observe a keep-out zone around the connectors.	4.3.1 and 5.3.1
R.LIDS.6074	The host vehicle shall provide a redundant means for removing power from an iLIDS heater system within 30 minutes of receiving a failure indication to protect the system from an overtemperature condition in the event that the heater system has failed on.	Appendix G
R.LIDS.6060	The vehicle supplying umbilical power shall remove power from the umbilical connectors prior to mating or de-mating the connectors to prevent damage to the connector.	4.3.1 and 5.3.1

Verify that this is the correct version before use

Host Requirement ID	Requirement	References
R.LIDS.6001	The vehicle housing the pyrotechnic controller for an active NDS shall meet the pyrotechnic system requirements of JSC-62809 (Sections 3.2, 3.6.2, 3.6.3, 3.6.8, 3.6.20, 7.3 – 7.3.4, 8.1 – 8.3.6, 8.4.2 – 8.4.5, 8.4.7 – 8.4.10, and 8.5), which includes requirements for pyrotechnic system fault tolerance, EMI susceptibility, and processing and handling.	5.3.4
R.LIDS.6002	The host vehicle shall ensure that vehicle/mission-specific loads are all enveloped by the NDS designed-to loads.	4.1.5
R.LIDS.6003	The host vehicle shall use the locking insert KNML10 x 1.5T for the structural interface to NDS to ensure back-out prevention.	Figure 5-3, Note 1
R.LIDS.6059	The host vehicle shall provide an aluminum mounting flange at least 0.75 in. (19.05 mm) thick.	Figure 5-3 (Page 4 of 5)
R.LIDS.6004	The host vehicle shall provide circuit protection to ensure that the NDS power cables and connectors upstream of the NDS circuit protection will not overheat.	Figure 5-15 and Appendix F
R.LIDS.6005	The host vehicle shall provide a Class H bonding to the umbilical connector's braided shield (excluding -302) and fault return wire.	4.2.1.1.1 and Figure 4-26
R.LIDS.6048	The host integrating NDS (-302 and -305) shall provide class-R/H bond at the NDS electrical box-to-host vehicle interface grounded structure.	5.3.9 and Figure 4-26
R.LIDS.6056	The host vehicle shall provide a Class R bonding path through the base of the NDS tunnel.	4.2.1.1 and Figure 4-26
R.LIDS.6006	The host vehicle shall maintain NDS within its operating and non-operating temperature limits.	4.1.1, 5.2.2, and 5.3.7
R.LIDS.6007	The host integrating -302/-305 electrical boxes shall provide a minimum thermal contact conductance of 1.04 Btu/hr-°F at each of the two mounting interfaces per box for the metal-to-metal contact area such that maximum interface temperature is122 °F.	5.2.2.1
R.LIDS.6055	The host integrating -302/-305 electrical boxes shall provide a maximum temperature of 122 °F at the mounting interface.	5.2.2.1
R.LIDS.6061	The host vehicle shall ensure that NDS IVA-accessible surfaces are within the safe temperature range for crew translation through the docking tunnel or provide the crew with appropriate personal protective equipment to protect them from hot or cold surfaces	5.2.2

Verify that this is the correct version before use

Host Requirement ID	Requirement	References
R.LIDS.6062	Host vehicles shall provide EVA translation aids and worksite restraints for EVA operations in the vicinity of the NDS. The design of these components can be ground installed or on-orbit installed and they should include considerations for crewmember hand-over-hand translation from vehicle to vehicle, such that the gaps do not exceed 24". It should also include considerations for crew worksite restraint for sealing surface cleaning operations such that the crew can adhere to the NDS 68-inch diameter EVA keep-out zone. If specific tools are required not in current ISS EVA tool inventory, they should be provided.	N/A
R.LIDS.6008	The host vehicle shall respond to NDS heater H&S message anomalies (including lost and corrupted H&S messages) in accordance with the NDS heater failure response table.	5.3.7 and Appendix G
R.LIDS.6009	The host vehicle shall maintain all NDS surfaces Visibly Clean (VC) Sensitive and NDS seals VC Highly Sensitive following receipt for integration.	4.1.3.2
R.LIDS.6077	The host vehicle shall prevent debris generated or released during vehicle launch and/or ascent from contaminating NDS-sensitive surfaces, including soft capture interfaces, hard capture interfaces, and umbilicals. Rationale: NDS is not verified to be tolerant to debris and must be protected from contamination generated or released during launch and ascent operations. Of particular concern are the exposed docking interfaces, including soft capture interfaces (e.g., magnets, capture sensors) and the hard capture interfaces (e.g., hooks and umbilicals).	
R.LIDS.6011	The host vehicle shall protect the NDS from primary lightning effects (i.e., lightning direct current path) and limits secondary effects to within the NDS Safe Operation Area (SOA).	5.3.6.1 and Figure 5-11
R.LIDS.6013	The host vehicle shall verify that the NDS soft capture system is locked down for launch using NDS telemetry.	Appendix C
R.LIDS.6014	The host vehicle shall supply power within the NDS capability to operate.	5.3.5
R.LIDS.6016	Each HV's firing circuitry channel shall supply sufficient power for a sufficient duration to ignite an NDS NSI.	5.3.4
R.LIDS.6075	The host shall fire no more than 12 hooks (2 NSIs) simultaneously.	5.3.4

Verify that this is the correct version before use

Host Requirement ID	Requirement	References
R.LIDS.6076	If the host vehicle fires 12 hooks (2 NSIs) simultaneously, the 12 hooks shall either be all passive or all active.	5.3.4
R.LIDS.6018	The chaser vehicle shall approach the target vehicle within the NDS Initial Contact Conditions “Design To” Limits (i.e., soft capture envelope).	Table 4-1
R.LIDS.6019	The host vehicle Guidance, Navigation, and Control (GN&C) for the NDS in active mode shall transition into free drift within 500 ms of receipt of the “initial contact” indication in the NDS H&S message from either system A or system B.	4.1.2.7
R.LIDS.6022	The host vehicle GN&C for the NDS in passive mode shall transition to free drift after receipt of the soft capture indication within 5 seconds (TBR-54a) for host vehicles < 25 ton and 60 seconds (TBR-54b) for ISS size vehicles.	4.1.2.7
R.LIDS.6023	The host vehicle with the NDS in passive mode shall receive the soft capture indication from either NDS system A or NDS system B or via communication from the vehicle with the docking system in active mode. Rationale: In order to meet integrated 2FT, the host vehicle with the NDS in passive mode must rely on communication from the vehicle with the docking system in active mode in addition to NDS system A/B redundancy.	4.1.2.7
R.LIDS.6057	The host vehicle with the NDS in active mode shall send both NDS system A and system B the “Capture” command at the final GN&C transition to docking approach at least 20 seconds prior to expected first contact.	5.4.1.1
R.LIDS.6025	The Host Vehicle with the NDS in active mode for docking shall prohibit firing thrusters from the time it sends the Capture command until it receives the Capture command “executed” status from both NDS systems, A and B.	N/A
R.LIDS.6071	The Host Vehicle shall send all commands intended for both NDS systems A and B within 1 second of each other.	N/A
R.LIDS.6026	The host vehicle shall respond to NDS failure indications (including loss of H&S message or a corrupted/repeating H&S message) per the FDIR logic tables in Appendix G within 500 ms from the time the NDS provides the failure indication.	5.4.1.3 and Appendix G

Verify that this is the correct version before use

Host Requirement ID	Requirement	References
R.LIDS.6027	The host vehicle docking with an NDS in active mode shall provide the capability to remove power from NDS and abort a docking attempt in the event that NDS system A and system B have experienced failures . The docking attempt abort criteria are contained in the FDIR logic tables in the NDS IDD.	5.4.1.3, Appendix G
R.LIDS.6066	Host-initiated docking terminate command shall be accompanied by either GN&C abort, retreat, or hold position to avoid collision.	5.4.1.3
R.LIDS.6028	The host vehicle shall separate the actions required to enable power to NDS such that enabling of NDS motor power and NDS control system power are never combined into a single command or crew action or could be activated by a single failure.	5.4.1.1
R.LIDS.6029	The host vehicle shall separate the actions required to command NDS to undock such that the Enable Undock and Execute Undock commands are never scripted together in the host vehicle software.	5.4.1.1
R.LIDS.6030	In order to preclude a catastrophic inadvertent undocking, flight and/or ground crews shall ensure that power is removed from both NDS systems A and B prior to unlocking the hatch on either side of the docking vestibule.	N/A
R.LIDS.6067	Power shall not be restored to either NDS system A or B until the crew is prepared for undocking; this includes the hatches on both sides of the docking vestibule being closed and confirmed to be locked.	N/A
R.LIDS.6031	The departing vehicle shall provide the capability to recover from an uneven departure using its GN&C sensors and thrusters to prevent a collision from occurring. Refer to JSC-63844, NDS Capture Performance Data Book.	N/A
R.LIDS.6033	The host vehicle provides separate power strings to NDS system A, NDS system B, and the pyrotechnics controller such that the undocking function is 2-FT to loss of power using independent controls.	Figure 5-15 and Appendix F
R.LIDS.6035	The host vehicle shall limit the depressurization rate to 0.76 psi/sec (5.24 kPa/sec) over the range of 15.2 psia (104.8 kPa) to 5.5E-12 psia (2.7E-10 Torr).	R.LIDS.0103
R.LIDS.6036	The host vehicle shall limit the repressurization rate to 0.30 psi/sec (2.07 kPa/sec) repressurization rate over the range of 5.5E-12 psia (2.7E-10 Torr) to 15.2 psia (104.8 kPa).	R.LIDS.1118

Verify that this is the correct version before use

Host Requirement ID	Requirement	References
R.LIDS.6037	The two mated host vehicles together shall provide a minimum of 2-FT to an inability to depressurize the docking vestibule to a minimum of 0.5 PSI for undocking.	R.LIDS.6053 R.LIDS.1144
R.LIDS.6038	The host vehicle shall provide an indication to the mated host vehicle that NDS has failed to gain structural integrity or requires interfacing separators to be charged or (if provided) interfacing active hooks to be closed.	4.1.3.4 and 4.1.3.5
R.LIDS.6040	The host integrating NDS (-302/-305) shall provide MMOD shielding for NDS (-302/-305) to meet vehicle Probability of No Penetration (PNP) requirements.	3.1 and 5.2.2
R.LIDS.6041	The host integrating NDS (-302/-305) shall provide external TPS for NDS (-302/-305).	5.2.2.2
R.LIDS.6042	The host integrating NDS (-302/-305) shall provide mounting provisions for NDS (-302/-305) electrical boxes.	5.3
R.LIDS.6043	The host integrating NDS (-302/-305) shall provide connectors and cable restraints as required per host mounting implementation of NDS (-302/-305) electrical boxes.	5.3 and Figure 5-7
R.LIDS.6044	The host integrating NDS (-302/-305) shall provide passageway TPS and closeout for NDS (-302/-305).	3.1
R.LIDS.6045	Vehicle docking systems that NDS docks to shall have retractable separators. Rationale: The NDS SCS cannot compress separation pushers during retraction. In addition, the NDS relies on the mated vehicle to have a separation system for redundancy.	4.1.3.7
R.LIDS.6078	Vehicle docking systems to which NDS docks shall provide passive hooks with a compliance mechanism that meets the requirements of NASA-STD-5017 or MA2-00-057 and are considered by the ISS Safety Review Panel to meet the simple mechanism criteria (2-FT equivalent).	4.1.3.4
R.LIDS.6049	The host vehicle shall limit the NDS seals' cumulative exposure to ultraviolet below 214 (TBR-212) "sun hours" equivalent.	R.LIDS.0202 R.LIDS.1113

Verify that this is the correct version before use

Host Requirement ID	Requirement	References
R.LIDS.6050	The host vehicle shall ensure that prior to docking the NDS software parameters correspond to the planned docking event to ensure that the NDS SCS will perform as intended. For example, for different phases of the mission, the software parameters may be changed to optimize the capture performance for different vehicle configurations, masses, centers of gravity, and approach conditions.	5.4.4 and Appendix C
R.LIDS.6051	The host vehicle shall provide communication to NDS system A through physically separate paths from those for NDS system B.	5.3.6
R.LIDS.6052	The host vehicle shall provide power to NDS system A through physically separate paths from those for NDS system B.	5.3.5
R.LIDS.6053	The host vehicle that has closed NDS active hooks shall provide separate control paths for (a) commanding NDS to undock versus (b) enabling NDS control power and (c) enabling NDS motor power . Refer to SSP 50038 for additional information.	5.3.5 and 5.3.6
R.LIDS.6063	Vehicles with docking systems other than NDS that have dynamic seals shall limit seal adhesion during undocking to a maximum of 200 lbf (890 N) (TBR301). Note: Seal adhesion dependent on mated pairs (seal-on-seal or seal-on-plate). Therefore integrated analysis is required for hosts docking to an NDS.	N/A
R.LIDS.6064	Vehicles with docking systems other than NDS shall provide either a dynamic seal interface per R.LIDS.1006 or a sealing surface per R.LIDS.1007.	N/A
R.LIDS.6070	The host vehicle integrating -302 or -305 shall provide leak test ports and associated GSE.	6.1.5

Verify that this is the correct version before use

APPENDIX A ACRONYMS AND ABBREVIATIONS

AI	Action Item
ANSI	American National Standards Institute
APAS	Androgynous Peripheral Assembly System
AWG	American Wire Gage
BC	Bus Controller
Btu	British Thermal Units
C&DH	Command and Data Handling
CBCS	Computer Based Control System
CCSDS	Consultative Committee for Space Data Systems
CE	Complex Electronics
CID	Command ID
CRC	Cyclic Redundancy Check
C&T	Communication and Tracking
°C	Degrees Celsius
°F	Degrees Fahrenheit
D/C	Direct Current
D&C	Display and Control
DCN	Document Change Notice
deg/sec	Degrees per Second
DEM	Data Exchange Message
DP	Decision Pack
DSIP	Docking System Integration Panel
EA	Engineering Directorate
E3	Electromagnetic Environmental Effects
ECLSS	Environmental Control and Life Support System
EIA	Electronic Industry Association
EMA	Electromechanical Actuator
EMC	Electromagnetic Compatibility
FOD	Foreign Object Debris
FT	Fault Tolerance
ft/sec	Feet per Second

Verify that this is the correct version before use

FDIR	Fault Detection, Isolation, and Recovery
FRAM	Flight Releasable Attachment Mechanism
ft^3	Cubic Feet
GN&C	Guidance, Navigation, and Control
GSE	Ground Support Equipment
GUI	Graphical User's Interface
H&S	Health and Status
HCS	Hard Capture System
HDLC	High-Level Data Link Control
hPa	Hecto Pascal(s)
I/F	Interface
ICD	Interface Control Document
ID	Internal Diameter or Identification
IDD	Interface Definition Document
IDSS	International Docking System Standard
iLIDS	International Low Impact Docking System
i-LOAD	Initialization Load
IRD	Interface Requirements Document
ISS	International Space Station
IVA	Intravehicular Activity
Kbit	Kilobit
kg	Kilogram(s)
kgf	Kilograms Force
KOZ	Keep Out Zone
kPa	Kilo Pascal(s)
lb	Pound(s)
lbf	Pound Force
lbm	Pound Mass
LEO	Low Earth Orbit
LIDS	Low Impact Docking System
LSB	Least Significant Bit
m^3	Cubic Meters
MDM	Multiplexer/Demultiplexer

Verify that this is the correct version before use

MLI	Multi-Layer Insulation
MMOD	Micro Meteoroid Orbital Debris
ms	Millisecond(s)
m/s	Meters per Second
MSB	Most Significant Bit
MSID	Measurement Stimulation Identification
#	Number
N	Newton(s)
Nm	Newton-Meter(s)
NASA	National Aeronautics and Space Administration
NDS	NASA Docking System
NDSP	NASA Docking System Project
NSI	NASA Standard Initiator
OD	Outer Diameter
%	Percent
PCT	Post Contact Thrust
PDU	Power Distribution Unit
PEC	Pyrotechnic Event Controller
PIC	Pyrotechnic Initiator Controller
P/N	Part Number
PNP	Probability of No Penetration
psi	Pounds per Square Inch
PTRS	Project Technical Requirements Specification
pyro	Pyrotechnic
Rev.	Revision
RF	Radio Frequency
RMS	Remote Manipulator System
RPC	Remote Power Controller
RT	Remote Terminal
RTD	Resistive Temperature Device
RTH	Ready to Hook
RX	Receive
SCS	Soft Capture System

Verify that this is the correct version before use

Seq.	Sequence
SI	System International
SOA	Safe Operating Area
SSRMS	Space Station Manipulator System
S/W	Software
TBD	To Be Determined
TBR	To Be Resolved
TBS	To Be Specified
TIA	Telecommunication Industry Association
TLI	Trans-Lunar Injection
TPS	Thermal Protection System
TVS	Transient Voltage Suppressor
TX	Transmit
UML	Unified Modeling Language
VC	Visibly Clean
Vdc	Volts Direct Current
VM	Vehicle Manager
W	Watt(s)

Verify that this is the correct version before use

APPENDIX B DEFINITION OF TERMS

Reserved

Verify that this is the correct version before use

APPENDIX C NASA DOCKING SYSTEM (NDS) COMMAND DATA DICTIONARY [R.LIDS.0004], [R.LIDS.0014] TBR-75

NDS_IDD_Appendix_
C_Command_Data_D

Verify that this is the correct version before use

APPENDIX D NASA DOCKING SYSTEM (NDS) HEATER MASTER MEASUREMENT LIST (MML) TBR-76

LIDS_HTR_MML.xls

Verify that this is the correct version before use

APPENDIX E NASA DOCKING SYSTEM (NDS) CONFIGURATION DIFFERENCES

Dash Number	NDS (-301)	NDS (-302)	NDS (-303)	NDS (-304)	NDS (-305)
Configuration Differences					
Status	In Development	✓	Available on Request	Available on Request	Available on Request
Specification Max Weight (lb)	750	704*	✓	711	TBD-68
Host Power	120 Vdc	✓	28 Vdc	✓	28 Vdc
NDS Tunnel Height (in.) Flange-to-Flange	15	8.92	✓	✓	8.92
Dynamic Seal or Seal Surface	Seal	Seal surface	✓	✓	✓
Host Leak Check Port	NDS tunnel	Host tunnel	✓	✓	Host tunnel
Power/ Data Umbilical Interface	Internal to NDS	On Host	✓	✓	External Panel
SCS Magnet Striker	Yes	✓	✓	No	✓
Hooks	12 active/ passive	✓	✓	12 active only	✓
Pyrotechnic Hook Release	Yes	No	✓	No	✓
Electrical Boxes Mounting	Integral to NDS	On host	✓	✓	On host
Box Electrical Cable Length/ Routing	Integral to NDS	Host extension	✓	✓	Host extension, (Refer to Appendix H)
Hermetic Pass-Through for NDS Control	Integral to NDS	In host structure	✓	✓	In host structure
MMOD Shield	Integral to NDS	Host-provided	✓	✓	Host-provided
Passageway Closeout	Integral to NDS	Host-provided	✓	✓	✓
Life	231 days	15 years	✓	✓	✓

Verify that this is the correct version before use

Dash Number	NDS (-301)	NDS (-302)	NDS (-303)	NDS (-304)	NDS (-305)
Active Docking Cycles	4	Future	✓	✓	✓
Passive Docking Cycles	50	✓	✓	None	✓
Motorized Transfer Umbilicals	Power/data	Host harness	✓	✓	✓
Legend					
✓	Indicates configuration is same as -301				

* Note: The -302 mass listed does not include host-supplied components [e.g., Micro Meteoroid Orbital Debris (MMOD) shield, Thermal Protection System (TPS)].

Verify that this is the correct version before use

APPENDIX F HOST INTERFACE CONNECTOR PINOUTS [R.LIDS.5037]

IDD_appendix_F_14 JUL2011.xlsx

Verify that this is the correct version before use

APPENDIX G FAILURE RESPONSE TABLES

NDS Control System Failure Response

The host vehicle is required to perform failure recovery actions in response to various NDS failures. The recovery actions differ depending on the following:

a. The type of failure indication. Depending on the failure mode and the NDS software mode and state, the NDS will determine the appropriate failure indication to provide to the vehicle such that the vehicle can perform the appropriate recovery action. For failures that the NDS detects, the failure indication status is posted in the periodic Health and Status (H&S) message provided to the host vehicle through the serial data communications link. For failures that the NDS cannot detect, the vehicle will detect the failures through the integrity of the NDS H&S message that serves as a "heartbeat." Refer to Section 5.4.1.3.

b. Whether the failure indication was received from the system commanded to be "Primary" or from the system commanded to be "Non-Primary." Refer to Section 5.4.1.3.

c. Whether a previous NDS failure has already occurred.

d. Whether the active hooks have begun to travel (at which point a vehicle retreat is no longer practical).

Descriptions of the appropriate vehicle responses to NDS failures are described in the tables below.

First Failure Indication

	Vehicle Response if from Primary System	Vehicle Response if from Non-Primary System
"Pause" indication in H&S Message[1]	Vehicle commands both systems to pause for troubleshooting.	Vehicle commands both systems to pause for troubleshooting.
"Switch to Redundant String" indication in H&S Message	Vehicle commands Primary system to become Non-Primary and vice-versa, and sets software "flag" to terminate docking[4] on next Primary system "Switch to Redundant String," "System Failure," "Bad H&S Message," or "Incorrect Primary/Non-Primary" indication.	Vehicle sets software "flag" to terminate docking[4] on next Primary system "Switch to Redundant String," "System Failure," "Bad H&S Message," or "Incorrect Primary/Non-Primary" indication.

Verify that this is the correct version before use

	Vehicle Response if from Primary System	Vehicle Response if from Non-Primary System
1. "System Failure" indication in H&S Message OR 2. Bad H&S Message (i.e., missing, invalid, or repeating message) [3] OR 3. NDS H&S Message fails to include proper command receipt or command validation status	Vehicle removes power from Primary system and commands the Non-Primary system to become Primary. Vehicle sets software "flag" to terminate docking[4] on next Primary system "Switch to Redundant String," "System Failure," Bad H&S Message," or "Incorrect Primary/Non-Primary" indication.	Vehicle removes power from Non-Primary system. Vehicle sets software "flag" to terminate docking[4] on next Primary system "Switch to Redundant String", "System Failure", Bad H&S Message, or Incorrect Primary/Non-Primary indication.
Incorrect Primary/Non-Primary indication in H&S Message[3] (only applicable for software modes and states operating the soft capture system linear actuators – e.g., Active Dock mode, SCS Checkout mode)	(Note: In this case, the status of the system that is intended to be primary indicates it is non-primary) Vehicle removes power from the system in error and commands the non-primary system to become primary. Vehicle sets software "flag" to terminate docking[4] on next Primary system "Switch to Redundant String," "System Failure," Bad H&S Message, or Incorrect Primary/Non-Primary indication.	(Note: In this case, the status of the system that is intended to be non-primary indicates it is primary) Vehicle removes power from the system in error. Vehicle sets software "flag" to terminate docking[4] on next Primary system "Switch to Redundant String," "System Failure," Bad H&S Message, or Incorrect Primary/Non-Primary indication.
1. "Capture Anomaly" indication in H&S message, OR 2. Vehicle determines independently that capture has failed [5]	Vehicle determines if capture has failed or is still imminent. If capture has failed, the vehicle will send iLIDS the commands to terminate docking and the vehicle will retreat from the docking attempt.	(Same response as for primary system)

Subsequent Failure Indication(s)[2]:

	Vehicle response if from Primary System	Vehicle Response if from Non-Primary System
"Pause" indication in H&S Message[1]	Vehicle commands both systems to pause for troubleshooting.	Vehicle commands both systems to pause for troubleshooting.
"Switch to Redundant String" indication in H&S Message	Vehicle removes power from both the Primary and Non-Primary systems and terminates docking[4].	No action taken.

	Vehicle response if from Primary System	Vehicle Response if from Non-Primary System
1. "System Failure" indication in H&S Message, OR 2. Bad H&S Message (i.e., missing, invalid, or repeating message)[3], OR 3. NDS H&S Message fails to include proper command receipt or command validation status	Vehicle removes power from both the Primary and Non-Primary systems and terminates docking[4]	Vehicle removes power from Non-Primary system.
Incorrect Primary/Non-Primary indication in H&S Message[3] (Only applicable for software modes and states operating the soft capture system linear actuators – e.g., Active Dock mode, SCSCheckout mode)	(Note: In this case, the status of the system that is intended to be Primary indicates it is Non-Primary.) Same response as "System Failure" (above).	(Note: In this case, the status of the system that is intended to be Non-Primary indicates it is Primary.) Vehicle removes power from the system intended to be Non-Primary .
1. "Capture Anomaly" indication in H&S message, OR 2. Vehicle determines independently that capture has failed [5]	Vehicle determines if capture has failed or is still imminent. If capture has failed, the vehicle will send NDS the commands to terminate docking and the vehicle will retreat from the docking attempt.	(Same response as for primary system)

1. "Pause" is used by the NDS when the failure experienced in a system results in a desire to pause both systems for troubleshooting and synchronization purposes. Flight and ground crews can monitor the NDS telemetry and provide troubleshooting and corrective action commanding while the systems are paused. Note that there are some non-mission-critical failures that NDS may experience that do not result in a "Pause" indication; the telemetry provided by NDS will allow flight and ground crews to monitor these errors for later analysis and troubleshooting if needed.
2. "Subsequent Failure Indication(s)" means that a "flag" was set by the host vehicle computers to indicate that a relevant NDS failure has previously occurred.
3. Bad H&S Message and "Incorrect Primary/Non-Primary" indications are not part of the NDS H&S Message, and must be interpreted independently by the vehicle. Note that these detection methods can also be used to detect some host vehicle failures, such as communication and power failures.

   MIL-STD-1553B Note: The MIL-STD-1553B interface between a host vehicle and an NDS System consists of two separate serial buses or channels (A and B). Each NDS System (A and B) is connected to both serial buses (channels A and B). The host vehicle communicates with an NDS System on either channel A or B (but not both at a time). The loss of communication over a single MIL-STD-1553B channel is not considered a communication failure (because it may be possible for the host vehicle to communicate via the other channel); the loss of communication over both

channels is considered a communication failure and the host vehicle responds in accordance with the System Failure responses outlined in these tables.

4. "Terminate Docking" refers to the actions taken by the host vehicle to take appropriate trajectory actions to assure safety (such as holding position or retreating to a safe distance from the target vehicle).

   Depending on the docking phase, the vehicle performs one of the following actions to prevent a collision with the target vehicle:

   a. Failure occurs prior to the NDS receipt of the "Capture" command (i.e., during the Release SCS, Extend SCS, and Hold SCS software states):

      The Vehicle should maintain a safe distance from the target vehicle and perform troubleshooting before proceeding with docking.

      OR

   b. Failure occurs after the NDS Capture command is received, but before the HCS hooks begin to close (i.e., during the Capture SCS, Attenuate SCS, Align SCS, and Retract SCS software states):

      The vehicle should maneuver to a safe distance away from the target vehicle and perform troubleshooting before proceeding with docking.

      OR

   c. Failure occurs after HCS hooks begin to close (i.e., during Rigidize HCS, Stow SCS, Lock SCS, Charge HCS Separators, and Mate HCS Umbilicals software states):

      The vehicle with the failure informs the other vehicle of the failure to request for it to perform any necessary remaining docking functions, such as charging separators or closing hooks (if available).

   In the case where the vehicle performs the failure detection (reference note [3] above) or where NDS provides the "System Failure" indication, the vehicle must use the current configuration of the NDS (discernable from the software mode and state data in the NDS H&S message) to determine whether to perform the response per (B) or (C) above (i.e., to either perform a thrusting maneuver or to take no action and communicate the failure to the other vehicle). The "Pause" and "Switch to Redundant String" indications are unambiguous, however, and are only provided by NDS during the appropriate software states.

5. The "Capture Anomaly" indication is generated when NDS determines that first contact has occurred, but capture has not occurred as expected (detected by either a timer or load sensing indicates loss of contact). The vehicle can use independent timers and visual cues as available to independently determine whether capture has actually failed, or whether the vehicle should continue to attempt to dock. The vehicle may choose to ignore these cues, for example, in a contingency case (notional) where the vehicle is forced to approach with off-nominal initial contact conditions where capture takes longer than expected or where some interface separation is possible before achieving a successful capture.

Verify that this is the correct version before use

NDS Heater System Failure Response

The host vehicle is required to perform failure recovery actions in response to various NDS heater system failures. The recovery actions differ depending on the following:

1. The type of failure indication. The NDS provides temperature data and electrical current data to the host vehicle along with fault indications and heater controller health data. The host vehicle must use this data to respond to failure conditions appropriately. Additionally, the vehicle must monitor the integrity of the heater H&S message that serves as the "heartbeat" of the heater controller.
2. Whether the failure indication was in the same zone as a previous failure.

Preliminary descriptions of the appropriate vehicle responses to NDS heater system failures are described in the table below.

Failure Indication	Single System Failure	Redundant System Failure
1. Thermal sensor mismatch: Indication: Temperatures between Resistive Temperature Devices on a single channel. Each zone has RTD A and RTD B. If RTDs on the same channel in a single zone differ by more than TBR-52 25 °F (14 °C)	Vehicle commands the affected zone to be disabled.	Same as Single System Failure response. Also, the vehicle notifies flight and ground crews that a heater zone can no longer be monitored. The failures may result in mission replanning and/or further troubleshooting.
2. Under temperature indication: Either temperature on RTD A or RTD B in a zone drops below minimum temperature threshold for the applicable zone and operation scenario[3]	Vehicle notifies flight and ground crews of NDS thermal excursion. The failure may result in mission replanning and/or further troubleshooting including possible mission abort if the failures could affect docking soft capture performance. [1]	Same as Single System Failure response.

Verify that this is the correct version before use

3. Over temperature indication: Either temperature on RTD A or RTD B in a zone exceed the maximum temperature threshold for the applicable zone and operation scenario[3]	Vehicle uses heater current data to determine if a heater is inadvertently powered on. If a heater is powered on, the vehicle commands the affected zone to be "disabled"[1]. If the zone cannot be disabled or the current does not drop, the vehicle removes power from the affected heater system within 30 minutes of receiving a failure indication from NDS. Refer to R.LIDS.6074. Also, the vehicle notifies flight and ground crew of NDS thermal excursion. The failure may result in mission replanning (e.g., change in vehicle attitude or delay in docking attempt), further troubleshooting, or even mission abort if the failures could affect docking soft capture performance.	Same as Single System Failure response.
4. Over current indication: Current in any zone exceeds 7 Amps or a disabled zone is continuing to pass current	Vehicle commands the affected zone to be "disabled." If the zone cannot be disabled or the current does not drop, the vehicle removes power from the affected heater system.	Same as Single System Failure response. If power was removed from both systems, the vehicle notifies flight and ground crews that a heater zone can no longer be monitored. The failures may result in mission replanning and/or further troubleshooting.
5. Either: a. Heater Controller Error indication in H&S Message, OR b. Bad H&S Message (i.e., missing, invalid, or repeating message)[4]	Vehicle removes heater power from affected system.	Vehicle removes heater power from both affected systems. Also, the vehicle notifies flight and ground crew that heater temperatures can no longer be monitored. The failures may result in mission replanning and/or further troubleshooting.
6. Parameter not changed per command: H&S message reports no change in zone settings (min/max temps or enable/disable status) after commanded	Vehicle notifies ground crew to monitor zone temperatures because iLIDS will not accurately report under-temperature or over-temperature conditions to the desired set points or did not enable/disable requested zone.	(Same as Single System Failure response) Additionally, this failure condition may allow a zone to drop below its minimum allowable temperature for the applicable mission phase.

1. An under-temperature indication can be expected when changing the temperature set points for a new mission phase. The vehicle should provide time for the system to reach its new temperature

settings before responding to these under-temperature indications. For example: when the vehicle transitions from the lower "survival" set points to higher "operational" set points in preparation for check-out or docking, some zones may be below the "operational" limits until the heaters can warm the system. When the system is warm enough to be above its minimum "operational" set points, the under-temperature indications will turn off and the NDS controllers can be powered on for checkout or docking.

2. For a failure that only affects a single zone, the responses described in the "Redundant System Failures" column of the table only apply to the worst-case failures (i.e., those failures that occur in the same zone in both systems). If the failures only affect a single zone and occur in different zones in the two heater systems, both failure responses should be the responses described in the "Single System Failures" column of the table.
3. Maximum and minimum allowable temperatures for the various zones under various operating and non-operating conditions are defined in JSC-65978, iLIDS Thermal Data Book. For the NDS "flags" in the H&S data, the host vehicle can send commands (if desired) to change these thresholds for various mission phases. (Note that changing the minimum allowable temperature set point will also change the temperature at which the heaters turn on and off, whereas changing the maximum allowable temperature set point has no effect on.)
4. "Bad H&S Message" is not part of the NDS heater H&S Message and must be interpreted independently by the vehicle. These detection methods can be used to detect communication and some power failures in the host vehicle as well.

MIL-STD-1553B Note: The MIL-STD-1553B interface between a host vehicle and an NDS System consists of two separate serial buses or channels (A and B). Each NDS System (A and B) is connected to both serial buses (channels A and B). The host vehicle communicates with an NDS System on either channel A or B (but not both at a time). The loss of communication over a single MIL-STD-1553B channel is not considered a communication failure (because it may be possible for the host vehicle to communicate via the other channel); the loss of communication over both channels is considered a communication failure and the host vehicle responds in accordance with the responses outlined in this row of the table.

Verify that this is the correct version before use

APPENDIX H CABLE MASS AND LENGTH ESTIMATING TOOL

Note: Attached spreadsheet can be used to calculate mass and length options for extension cables for remote mounted electrical boxes (-302 and -305 only). The spreadsheet contains macros. When opening the sheet from this document it is necessary to switch to Excel application to accept the request to enable macros.

Refer to attached PowerPoint for assumptions and block diagrams to aid in use of spreadsheet.

Vdrop_Calc__11_21_11_hidden.xlsm

Assumptions.pptx

Verify that this is the correct version before use

APPENDIX I ERRATA AND TO BE DETERMINED/TO BE REVIEWED LIST

This document is intended to define all functional interfaces and their locations. However, the document is being released in parallel with the maturing interface definition. As such, there are several To Be Determined (TBD) and To Be Reviewed (TBR) values. These have been uniquely identified in the TBD/TBR Identification table for closure tracking and update in future releases.

TBD/TBR Identification		
TBD/TBR #	**Section, Figure, or Table #**	**Section, Figure, or Table Title**
TBR-44	Potential Future Addition	Assess if electrical box warm up time is a requirement for the host.
TBD-45	Appendix C	NDS Commands Data Dictionary
TBD-46	Table 4-1 notes	Initial Capture Conditions
TBR-52	Appendix G	Failure Response Table Temperatures
TBR-54a/b	Section 7.0	TBR tied to IDD requirement R.LIDS.6022
TBD-67	Table 3-1	Mass Properties (POI &MOI) for -302 with and without electrical Boxes
TBD-68	Table 3-1	Mass Properties for -305
TBD-70	Section 5.3.4	Pyrotechnic Foreign Object Debris (FOD)
TBR-75	Appendix C	NDS Command Data Dictionary
TBR-76	Appendix D	NDS Heater Master Measurement List (MML)
TBD-77	Appendix F	-305 Pinouts
TBD-80	Figure 5-18	NDS (-302 and -305)-to-Host Vehicle Electrical Interfaces
TBR-88	4.1.3.7, Fig 4-25	Separation Force and Energy
TBR-212	Section 7.0	TBR tied to PTRS requirements R.LIDS.0202, R.LIDS.1113
TBS-217	Section 3.8	Full NDS Berthing Con-Ops

In addition, the NDS IDD Open Work table lists items currently in process, which will be assessed in the next revision of the NASA Docking System (NDS) Interface Definition Document (IDD).

Verify that this is the correct version before use

NDS IDD Open Work	
Item #	**Description**
1	Update IDD as required for -305 interfaces
2	Update IDD as required for 28VDC host interface power
3	Provide additional Table 4-1: NDS Initial Contact Conditions “Design To” Limits [R.LIDS.0063] based on international agreements, tolerances, and other class (i.e. different mass) vehicles.
4	Review Guide Pin dimensions based proposed recommendation to decrease pin size.
5	Update Figure 5-18: NDS (-302 and -305)-to-Host Vehicle Electrical Interfaces to show external connectors specific locational dimensions for -305 and J#'s
6	Review Section 7.0 Host Interface Requirements
7	Provide complete definition of i-Load parameters in Appendix C.
8	Update Appendix C with list of s/w configurable CE registries and values for each
9	Appendix H: Update definition of performance parameters for remote mounted electrical boxes 28 VDC extension cables and box-to-box cables to allow hosts to design alternate cable combinations (i.e., longer box-to-box and shorter extension or vice-versa).
10	Review separation system energy, force, and curve based on latest VSI design.

Verify that this is the correct version before use

APPENDIX J INTERFACE DEFINITION DOCUMENT (IDD) CHANGE RECORD FOR REVISION D

This appendix details the changes made to Revision (Rev.) D of the NASA Docking System (NDS) Interface Definition Document (IDD). Specific revisions are provided in the following table.

Rev. #	Description
1	Clarified that only -301 and -302 are under development. Hence, -303 and -304 information is for reference only.
2	Synchronized verification Identification (ID) numbers to match the Project Technical Requirements Specification (PTRS) ID numbers.
3	Defined the steady-state mated and pressurized thermal limits for crewed and uncrewed vehicles (R.LIDS.5055 and R.LIDS.5056).
4	Separated R.LIDS.6007 into two requirements (R.LIDS.6007 and 6055).
5	Removed all references to the Common Docking Adapter (CDA).
6	Added wording to Sections 4.1.1.2.1 and 4.1.1.2.2 to define the maximum allowable 100 °F between two mating interfaces for soft capture and to define the allowable temperature differential for hard mate.
7	Updated Sections 4.1.3.5, 4.1.3.6, and 4.1.3.7 with description of striker zone locations and elevations.
8	Added Sections 4.3.1.2, 4.3.1.2.1, and 4.3.1.2.2 to define the Ethernet and MIL-STD-1553 cables specification per PTRS requirements R.LIDS.0024, R.LIDS.0024.1, and R.LIDS.0024.2.
9	Updated based on comments received from Boeing for the Flight Releasable Attachment Mechanism (FRAM)-type connector pinouts.
10	Rewrote Section 5.2.1.3 describing NDS electrical boxes and added Figure 5-2. Added motor, power, and control box assembly drawing numbers to define details of box configurations.
11	Added Sections 5.2.2.1.1.1, 5.2.2.1.1.2, and 5.2.2.1.1.3 to define the temperature ranges for the unmated NDS under non-operational, non-powered conditions.
12	Clarified in Section 5.3.3 that the NDS does not connect this switch to the data bus in order to maintain Electromagnetic Interference (EMI) shielding on the data bus harness. It is the host's responsibility to wire from this switch connector to terminate the data bus.

Verify that this is the correct version before use

Rev. #	Description
13	Clarified in Section 5.3.3.1 that the NDS (-302) Umbilical Connector Data Bus Termination is a host vehicle responsibility. The host must provide the switch, cable, and connector. NDS (-302) provides the mechanical interface for the data bus termination only.
14	Updated the heat power and control Section 5.3.7 to clarify that the heater control is independent of the NDS Software (S/W) control system and that the NDS has a blind mode default operation if communication to the host vehicle is lost or if the NDS is stored on-orbit prior to full integration with the host. Further, the host must ensure the heater control system stays within operational limits if the boxes are unpowered.
15	Changed the payload Health and Status (H&S) packet parameters size from 998 to 1000 bytes in Figure 5-10.
16	Closed TBD-47. Removed TBD-47 reference from Figure 5-10 and it is tracked in TBD-48.
17	Closed TBD-55, zone current for the NDS Heater System Failure Response table.
18	Added a requirement to Section 7.0 that must be met in order for the NDS to satisfy the requirements of SSP 50038 as defined in the International Low Impact Docking System (iLIDS) CBCS matrix.
19	Section 7.0: Added R.LIDS.6059, defining minimum flange thickness.
20	Appendix F: Corrected the pinouts for the -302. Updated appendix with full pinout list for -302 extension cables and box-to-box cables.
21	Added Table 5-4 for the NDS Heater Command Format and the 1553 subaddress assignment. This addition closes TBD-48 and an open action.

Verify that this is the correct version before use

Rev. #	Description
22	The following figures have been updated: • Figure 4-2: Clarified the figure with notes about passageway with and without guide petals. Also, define the location for the Hard Capture System (HCS) guide pin hole with undocking complete sensor at 12 o'clock as well as ready-to-hook striker. • Figure 4-3: Updated overall height (-302) of the NDS from 29.6 in. (227 mm.) to 29.6 in. (752 mm). Add dimension from HCS mating plane to top of Micro Meteoroid Orbital Debris (MMOD) shield. Identify this as an axial Keep Out Zone (KOZ) for the MMOD shield • Figure 4-10: Corrected .76/.75 mm offset to .9 mm in detail top and side views. • Figure 4-11: Changed the mounting pattern for the body latch adding shear pin slot and correcting dimensions per latest drawing SDZ29101840, SCS Mounting Bracket Assy-HCS, iLIDS. • Figure 4-13: Corrected sensors/striker locations from 7.5 degrees/52.5 degrees to 7 degrees/53 degrees. • Figure 4-14: Updated to define separator striker locations and size. • Figure 4-15: Added "See Note 4" to .039 in. (1 mm) dimension. • Figure 4-16: Added "See Note 6" to .039 in. (1 mm) dimension. • Figure 4-26: Updated to show umbilical bond path. • Figure 4-27: Updated to show the J (receptacle) and P (plug) correct numbers for systems A and B power and data umbilicals. Removed Androgynous Peripheral Assembly System (APAS) x-connector KOZ. Added umbilical KOZ. • Figure 5-3 (Page 4 of 5): Host Vehicle Mounting Flange Shear Hole Detail with new updated figure. • Figure 5-10: Removed the reference to TBD-47 from the figure since this TBD is being worked out as part of TBD-48, Serial communications Heater Command Code (Hex). • Updated Figure 5-4 (was Figure 5-18) with a new multiview figure to define box envelope. • Figure 5-15: Reversed J23B and J28 for the power and data umbilicals. Point J23A/B, J35A/B, J28A/B to inside connectors instead of outside connectors. Change J42B(H6B) to J42B(H7B) instead. • Figure 5-16: Changed locations of vehicle and ground Support Equipment (GSE) connectors. • Figure 5-17: Added H and R dimensions for connector location defined in Table 7-1. • Figure 5-18: Updated to show -302 connector panel and external harness details.

Verify that this is the correct version before use

APPENDIX K INTERFACE DEFINITION DOCUMENT (IDD) CHANGE RECORD FOR REVISION E

This appendix details the changes made to Rev E of the NDS IDD. Most of the changes identified in this revision were based on NDS CDR RIDs and comment. For reference see RID tool database.

https://oasis.jsc.nasa.gov/projects/ilids/Lists/RID%20Tool/AllItems.aspx

Specific non CDR revisions are provided in the following table.

Rev. #	Description
1	Updated IDD applicable sections, tables, and figures to include -305 configuration per Docking System Integration Panel (DSIP) recommendation.
2	Updated Section 2.1 and Figure 5-3, note 4 with the correct Tunnel Drawing Host Drill Template per Boeing.
3	Closed TBD-2 by adding -304 mass properties data to Table 3-1: Mass Properties.
4	Updated the maximum differential allowable temperature for the SCS in Section 4.1.1.2.2.
5	Per LCCP change and CDR baseline, updated Section 4.1.3.5 with two undocking sensors information instead of three.
6	Added Section 4.1.3.6 to include the HCS compressive force resistance data during SCS retraction.
7	Updated Section 5.3.4 with pyro firing timing based on inputs from EA and Boeing.
8	Combined NDS Command List and MSID appendices into one Appendix C.
9	Updated Section 7.0 based on JSC-63688, Risk Assessment Executive Summary Report (RAESR) for the International Low Impact Docking System (iLIDS) updates, DSIP, and IDD actions. The RASER is also added to Section 2.2, Reference Documents, since the host requirement IDs listed in Section 7.0 have corresponding hazards listed in the RAESR.
10	Added new Appendix D, Heater Master Measurement List (MML).
11	Updated Appendix E, NDS Configuration differences to include -305.
12	Updated the introduction to Section 4.0 to state that this section covers NDS and NDS-compatible systems.
13	Updated Section 5.3.4 to state that shock value is the maximum seen at both the host and the docking system interface

Verify that this is the correct version before use

Rev. #	Description
14	Added two generic requirements; R.LIDS.6072 and R.LIDS.6073 to Section 7.0 stating that the host vehicle mating to NDS shall meet interface definition in Sections 4.0 and 5.0. Based on this addition, R.LIDS.6068 and R.LIDS.6069 are deleted.
15	Corrected hard capture mated loads values in Table 4-6 and Table 4-7.
16	Added new Section 3.7, NDS Component Numbering, detailing the NDS components numbering and labeling system.
17	Updated Section 5.4, NDS-to-Host Vehicle Software Interface, with new text and data from the software group.
18	Deleted Table 5-3, Heater Command List for the MIL-STD Serial Port, and added this data in Appendix D, NDS Heater Master Measurement List (MML).
19	Added TBR-75 and 76 to Appendix C and Appendix D respectively for future updates to these appendices.
20	Updated thermal Sections 4.1.1.3.3, 5.2.2.1.1.3, 5.2.2.1.4, and 5.2.2.1.5.
21	Added Appendix H, Cable Mass and Length Estimating Tool.
22	Updated Appendix C and combined NDS commands list and Memory Measurement List (MML).
23	Updated 5.4.1.1 to generic host interface.

Verify that this is the correct version before use

Rev. #	Description
24	The following figures have been updated: • Updated all figures for new coordinate system. All figures will use Structural coordinate system with Z axial and Y through the guide pin/receptacle pair. • Figure 4-2: Removed undocking complete sensor note from Guide Pin. • Figure 4-3: Added connector keep-out zone to accommodate host mating connectors for power and data. • Figure 4-12: Added number labels on top and inner surfaces. • Figure 4-13: Added number labels on top and inner surfaces. • Figure 4-14: Removed undocking complete sensor note from Guide Pin . • Figure 4-18: Added information about lubrication. • Figure 4-19: Modified to match latest IDSS IDD. • Figure 4-20: Modified to match latest IDSS IDD. • Figure 4-21: Modified to match latest IDSS IDD. • Figure 4-22: Added new figure for the HCS Active Hook Motion envelope per IDSS IDD. • Figure 4-23: Added new figure for the Load Response of Active Hook Mechanism. • Figure 4-24: Added new figure for the Load Response of Passive Hook Mechanism (including Spring Washer Stack). • Figure 4-26: Updated to including -305 configuration. • Figure 5-3: Clarified host interface bolt protrusion and hole requirements. Updated seal groove dimensions and clarified bond path/surface finish location for host. Updated tolerances. Changed shear pin clocking. Changed drill tool locating slot dimensions. Omitted o-rings for clarity from bolt pattern view. • Figure 5-4: Updated to include shaded area and label shaded area with added Note 1. • Figure 5-7: Updated to include -305 configuration. • Figure 5-12, Figure 5-13, and Figure 5-14: Host Vehicle-to-NDS FDIR Handling Interface: Updated to show more generic command handling interface in associated text. • Figure 5-18: Updated to show external connectors for -305.

Verify that this is the correct version before use

APPENDIX L INTERFACE DEFINITION DOCUMENT (IDD) CHANGE RECORD FOR REVISION F

This appendix details the changes made to Rev F of the NDS IDD. Most of the changes identified in this revision were based design maturity, closure to open AIs, NDSP Decision Packs (DP), TBDs/TBRs from Rev E, and newly added AIs and TBDs/TBRs.

Specific revisions are provided in the following table

Rev. #	Description
1	Updated Section 1.1 to clarify that due to limitations on some NDS electrical components, the initial certification will be only for LEO
2	Changed Drill Template Tool for NDS-Host Interface in Section 2.1 and in note 4 of Figure 5-3 to DRPSDZ29101974-5003 instead of -5001, since -5001 is used for the tunnel drawing (i.e., NDS side of the interface).
3	Updated Figure 4-3 notes to clarify that SCS full extension will be less when opposed to gravity.
4	Per AI # 137, updated Sections 4.1.1.2.1 and 4.1.1.2.2 to correspond to newly updated Figure 4-4: NDS Mating Interface Allowable Thermal Differential for Hard and Soft Capture [R.LIDS.5007].
5	Per AI # 141, updated Section 4.1.2.3 that the striker must provide a minimum of 2° rotational compliance from X-Y plane.
6	Updated Section 4.1.3.7 to state that the nominal force applied by the charged separator to the striker surface is 155 - 160 lbf (689 - 712 N)
7	Updated Table 4-8: FRAM-Type Connector Pinouts [R.LIDS.5022] with the new data.
8	Updated Section 5.2.2.1.5 to clarify that the power dissipation for both 120 VDC and 28 VDC is similar since both voltage power supplies have the same output power.
9	Updated Section 5.3.2.1 title to include NDS -305 configuration.
10	Updated Figure 5-7 note to state that the schematic figure defines the NDS connector to remote-mounted box connectors.
11	Updated Section 5.3.4 to clarify that a gang of six hooks is fired every other hook.
12	Added TBD-70: Pyro Foreign Object Debris (FOD) Section 5.3.4 to characterize the debris size and quantity distribution since FOD is not contained in the event of pyrotechnic firing.
13	Added Section 7.0 requirement, R.LIDS.6077, describing the prevention of NDS contamination due to debris generated or released during vehicle launch and/or ascent.

Verify that this is the correct version before use

Rev. #	Description
14	Per AI # 160 and NDSP-DP-03, updated Section 5.4.1.3, NDS FDIR, and Section 7.0 requirement R.LIDS.6026 to clarify that the allocation for the host to switch over from A to B is 500 ms instead of 120 ms and the total time required for a switch to take place from A to B is 580 ms instead of 200 ms. Clarified when the 500 ms starts.
15	Per AI # 126, added a hazard control requirement, R.LIDS.6074, for heater failure in Section 7.0. Updated Appendix G FDIR response for heater overtemp.
16	Added two hazard control requirements, R.LIDS.6075 and R.LIDS.6076, in Section 7.0 defining the number of NSIs that can be fired simultaneously and that they must be either all passive or all active hooks.
17	Per AI # 136, edited Section 7.0 requirement, R.LIDS.6037, to clarify that for undocking, the vestibule depressurization rate should be a minimum of 0.5 PSI.
18	Updated Appendix I based on latest status of TBDs/TBRs.
19	Updated Appendix D with the latest. Will remain TBR-76 until S/W CDR.
20	Updated Section 4.1.3.6 maximum compressive force resistance during SCS retract from 46 lbf (204.6 N) to 37.8 lbf (168.1 N) and mapped new PTRS requirement, R.LIDS.5062.
21	Per RID 347 and AI # 157, a new Section 7.0 requirement, R.LIDS.6077, is added to protect the NDS from contamination.
22	Per AI # 149, added new Section 3.8 for NDS berthing.
23	Added TBS-217 (Full NDS Berthing Con-Ops) to Section 3.8, NDS Berthing, and Appendix I.
24	Updated Section 7.0 requirement, R.LIDS.6038, for more clarification.
25	Per AI # 132, added subsection 5.4.1.4 describing the i-Load parameter concept to allow docking/berthing for different classes of vehicles.
26	Updated Table 5-10 by adding a new GSE packet ID.
27	Per AI # 138, updated Appendix C with the latest data.
28	Per AI # 155, updated Appendix H with the latest data from the electrical team.
29	Per AI # 124, updated Section 5.2.2.1 to define NDS-Host Vehicle thermal interface constraints.
30	Per AI # 142, updated Section 4.1.2 to reference SLZ29101641, Magnet with Dual Windings and Striker Plate Specification Control Drawing, in order to specify magnet properties in the event another entity builds their own.
31	Added SLZ29101641, Magnet with Dual Windings and Striker Plate Specification Control Drawing, to Section 2.1, Applicable Documents.

Verify that this is the correct version before use

Rev. #	Description
32	Per AI # 120, added new Section 4.1.4 and Table 4-2 to define NDS I/F component materials, surface coatings, and surface finishes.
33	Added new Section 7.0 requirement, R.LIDS.6078, for the vehicle docking system passive hooks mechanism to be in compliance with NASA-STD-5017 or MA2-00-057.
34	Updated Section 3.6 with the new coordinate system definition, adding the Docking coordinate system and clarifying the Structural coordinate system.
35	Updated Appendix G with the latest information from the S&MA team.
36	Updated Section 4.1.5.1, Soft Capture Docking Loads, and added Table 4-5: SCS Docking Loads for Active NDS, to show lower load case for active NDS dockings.
37	Updated Section 4.1.3.7 to decrease separation force and change energy available to zero separation point vs. umbilical demate. Added Figure 4-25.
38	Sections 2.1 and 4.3.1.2.1 changed from ANSI/TIA/EIA 568C.2 to ANSI/TIA/EIA 568B.2 for compatibility with ISS.
39	Update Table 3-1: Mass Properties to match correct Structural Coordinate System per Section 3.6.1.

Verify that this is the correct version before use

Rev. #	Description
40	The following figures have been updated: • Figure 3-3: NDS Structural Coordinate System and Figure 3-4: NDS Active and Passive Docking Coordinate Systems were added to Section 3.6 to define the NDS new coordinate system. • Figure 4-2: Updated notes on figure to match notes description. • Figure 4-3: Per AI # 144, updated MMOD outer diameter from 68.0 inch to 68.2 inch max to account for fastener head protrusions. Per TBR-41, set the reference ready-to-dock extension value to 12.5 inches. Updated figure notes to clarify that SCS Full Extension will be less when opposed to gravity. • Figure 4-4: NDS Mating Interface Allowable Thermal Differential for Hard and Soft Capture [R.LIDS.5007], updated with latest data • Figure 4-13: Per AI # 141, Edited to show 2° rotational compliance (next to "3X EQUALLY SPACED MAGNETIC STRIKER" callout. • Figure 4-14: Per AI # 127, replaced views that were inadvertently deleted in Rev. E. Also corrected note numbering inconsistencies between figure and text. • Figure 4-14: Per AI # 153, replaced views that were inadvertently deleted in Rev. E. • Figure 4-15: Per AI # 151, updated seal height from 0.073 inch to 0.083 inch to be consistent with revised seal requirement, R.LIDS.SEAL.034, for Maximum Seal Bulb Free Height. Updated note callouts on figure. Also corrected note numbering inconsistencies between figure and text. • Figure 4-16: Per AI # 154, updated mating flange surface recessed dimension from 0.039 inch to 0.040 inch. Updated note callouts on figure. • Figure 4-27: Per AI # 159, added dimension on centerline of the connector. • Figure 5-3: Per AI # 116, # 140, NDSP-DP-08, and NDSP-DP-14: updated dimension of host surface finish phantom line ID to be 0.5 inch diameter smaller than groove ID. Changed shear pin size. Specified the shear pin part number. Specified hole tool relief allowable.

Verify that this is the correct version before use